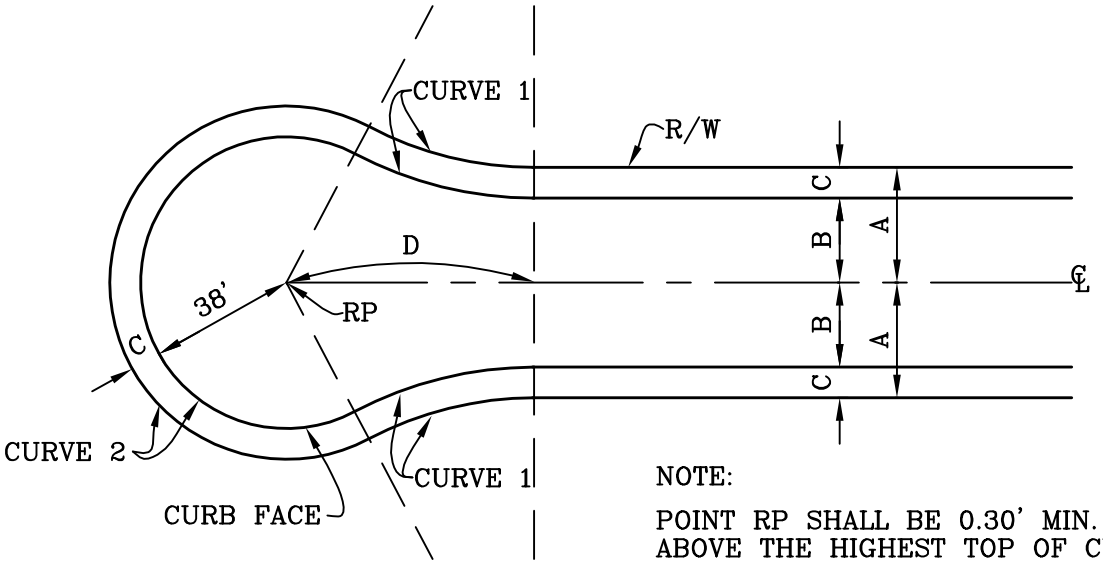

NOTE:

POINT RP SHALL BE 0.30' MIN. ABOVE THE HIGHEST TOP OF CURB ELEVATION WITHIN CUL-DE-SAC.

NOTE: (APPLIES TO ALL SHEETS)

MINIMUM STREET FLOW LINE GRADESHALL BE 0.5% MIN., REVERSE GRADE VERTICAL CURVES EXCEPTED.

CURVE 1											
R/W	A	B	C	D	△	CURB			PROPERTY LINE		
						R	L	T	R	L	T
80'	40'	32'	8'	40.25'	16°57'27"	100'	29.60'	14.91'	92'	27.23'	13.71'
60'	30'	22'	8'	64.50'	27°51'51"	100'	48.63'	24.81'	92'	44.74'	22.82'
56'	28'	20'	8'	68.15'	29°35'31"	100'	51.65'	26.41'	92'	47.52'	24.30'
52'	26'	18'	8'	71.55'	31°13'56"	100'	54.51'	27.95'	92'	50.15'	25.71'

CURVE 2									
R/W	A	B	C	D	△	CURB		PROPERTY LINE	
						R	L	R	L
80'	40'	32'	8'	40.25'	213°47'53"	38'	141.87'	46'	171.74'
60'	30'	22'	8'	64.50'	235°43'42"	38'	156.34'	46'	189.25'
56'	28'	20'	8'	68.15'	239°11'01"	38'	158.63'	46'	192.03'
52'	26'	18'	8'	71.55'	242°27'52"	38'	160.81'	46'	194.66'

CITY OF MISSION VIEJO

STANDARD CUL-DE-SAC (SYMMETRICAL PARKWAY)

STANDARD PLAN NO.

305

9-23-03

APPROVED RCE 30190 DATE

SHT 1 OF 4

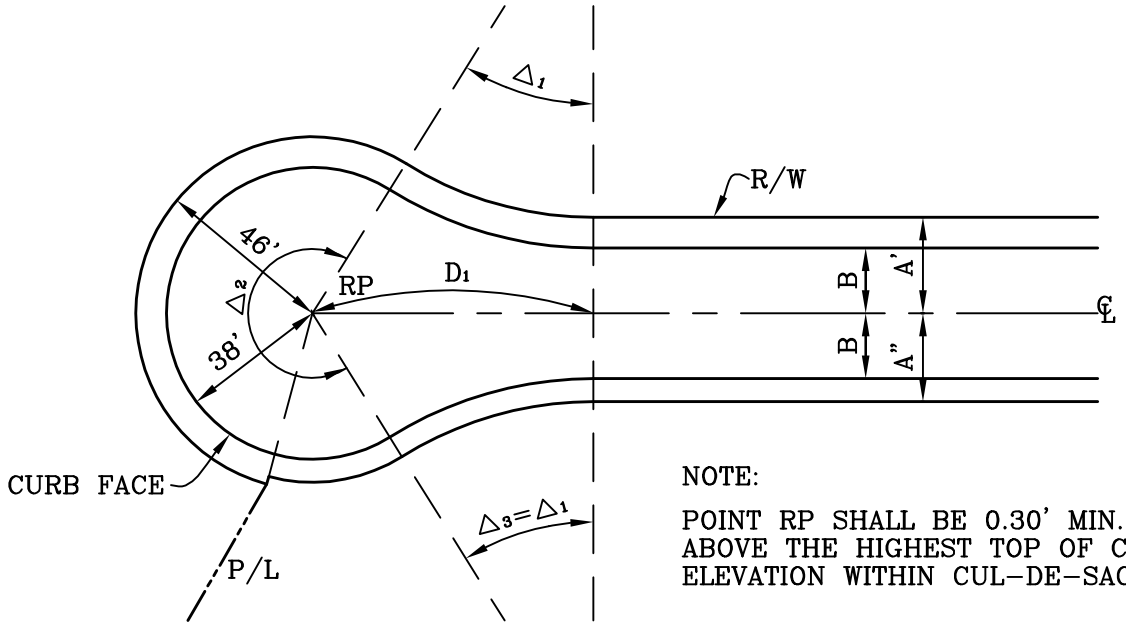

NOTE:

POINT RP SHALL BE 0.30' MIN. ABOVE THE HIGHEST TOP OF CURB ELEVATION WITHIN CUL-DE-SAC.

NOTE: REDUCTION IN PARKWAY WIDTH SHALL OCCUR AT THE PROPERTY LINE OF THE LAST LOT TAKING ACCESS FROM THE CUL-DE-SAC.

CURB CURVE DATA											
R/W	A'	A"	B	D_1	Δ_1	R_1	L_1	T_1	Δ_2	R_2	L_2
48'	25'	23'	17'	73.18'	32°01'26"	100'	55.89'	28.70'	244°02'53"	38'	161.86'
44'	23'	21'	15'	76.28'	33°33'26"	100'	58.57'	30.15'	247°06'53"	38'	163.89'
40'	22'	18'	14'	77.77'	34°18'04"	100'	59.87'	30.86'	248°36'08"	38'	164.88'

PROPERTY LINE CURVE DATA											
R/W	A'	A"	B	D_1	Δ_1	R_1	L_1	T_1	R_3	L_3	T_3
48'	25'	23'	17'	73.18'	32°01'26"	92'	51.42'	26.40'	94'	52.54'	26.98'
44'	23'	21'	15'	76.28'	33°33'26"	92'	53.88'	27.74'	94'	55.04'	28.34'
40'	22'	18'	14'	77.77'	34°18'04"	92'	55.08'	28.39'	96'	57.47'	29.63'

CITY OF MISSION VIEJO

STANDARD CUL-DE-SAC (UNSYMMETRICAL PARKWAY)

STANDARD PLAN NO.

305

9-23-03

APPROVED RCE 30190 DATE

SHT 2 OF 4

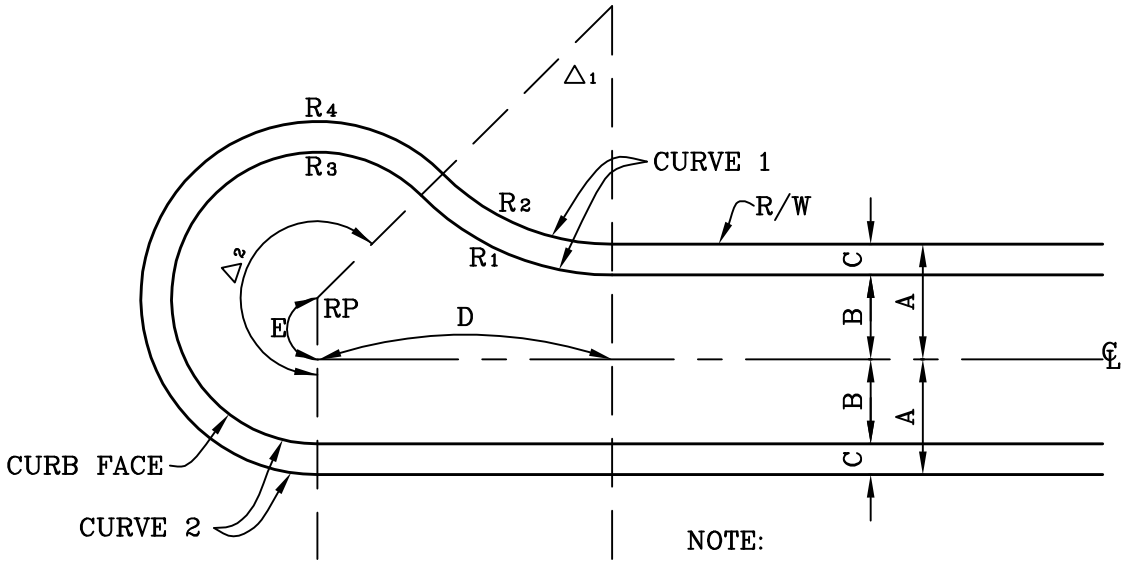

NOTE:

POINT RP SHALL BE 0.30' MIN. ABOVE THE HIGHEST TOP OF CURB ELEVATION WITHIN CUL-DE-SAC.

CURVE 1												
R/W	A	B	C	D	E	△1	CURB			PROPERTY LINE		
							R1	L	T	R2	L	T
80'	40'	32'	8'	49.48'	6'	27°15'58"	70'	33.31'	16.98'	62'	29.50'	15.04'
60'	30'	22'	8'	76.73'	16'	45°16'30"	70'	55.31'	29.19'	62'	48.99'	25.86'
56'	28'	20'	8'	80.50'	18'	48°11'23"	70'	58.87'	31.30'	62'	52.15'	27.73'
52'	26'	18'	8'	83.90'	20'	50°58'38"	70'	62.28'	33.37'	62'	55.16'	29.56'

CURVE 2										
R/W	A	B	C	D	E	△2	CURB		PROPERTY LINE	
							R3	L	R4	L
80'	40'	32'	8'	49.48'	6'	207°15'58"	38'	137.46'	46'	166.40'
60'	30'	22'	8'	76.73'	16'	225°16'30"	38'	149.41'	46'	180.86'
56'	28'	20'	8'	80.50'	18'	228°11'23"	38'	151.34'	46'	183.20'
52'	26'	18'	8'	83.90'	20'	230°58'38"	38'	153.19'	46'	185.44'

NOTES:
1. RADIAL POINT MAY BE OFFSET EITHER RIGHT OR LEFT OF CENTERLINE.
2. SEE SHEET 4 FOR UNSYMMETRICAL PARKWAY DETAILS.

CITY OF MISSION VIEJO

OFFSET CUL-DE-SAC (SYMMETRICAL PARKWAY)

STANDARD PLAN NO.

305

9-23-03

APPROVED RCE 30190 DATE

SHT 3 OF 4

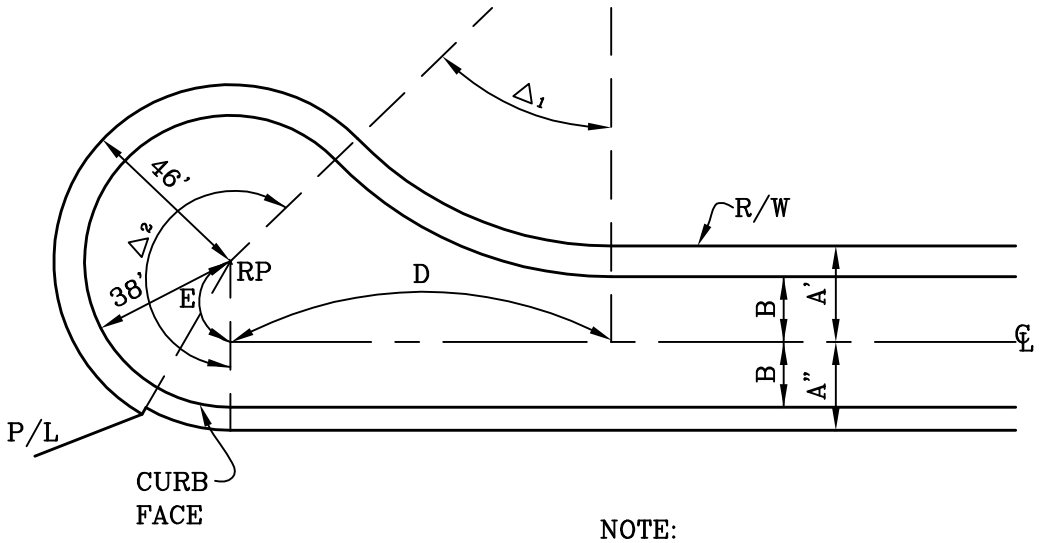

NOTE:

POINT RP SHALL BE 0.30' MIN. ABOVE THE HIGHEST TOP OF CURB ELEVATION WITHIN CUL-DE-SAC.

CURB CURVE DATA											
R/W	A'	A"	B	D	Δ_1	R_1	L_1	T_1	Δ_2	R_2	L_2
48'	25'	23'	17'	99.14'	45°55'15"	100'	80.15'	42.37'	225°55'15"	38'	149.84'
44'	23'	21'	15'	102.86'	48°11'23"	100'	84.11'	44.72'	228°11'23"	38'	151.34'
40'	22'	18'	14'	104.61'	49°71'39"	100'	86.03'	45.88'	229°17'39"	38'	152.07'

PROPERTY LINE CURVE DATA									
R/W	A'	A"	B	D	E	Δ_1	R_1	L_1	T_1
48'	25'	23'	17'	99.14'	21'	45°55'15"	92'	73.74'	38.98'
44'	23'	21'	15'	102.86'	23'	48°11'23"	92'	77.38'	41.14'
40'	22'	18'	14'	104.61'	24'	49°71'39"	92'	79.15'	42.21'

NOTE: REDUCTION OF PARKWAY WIDTH SHALL OCCUR AT THE PROPERTY LINE OF THE LAST LOT TAKING ACCESS FROM THE CUL-DE-SAC.

CITY OF MISSION VIEJO

OFFSET CUL-DE-SAC (UNSYMMETRICAL PARKWAY)

STANDARD PLAN NO.

305

9-23-03

APPROVED RCE 30190 DATE

SHT 4 OF 4