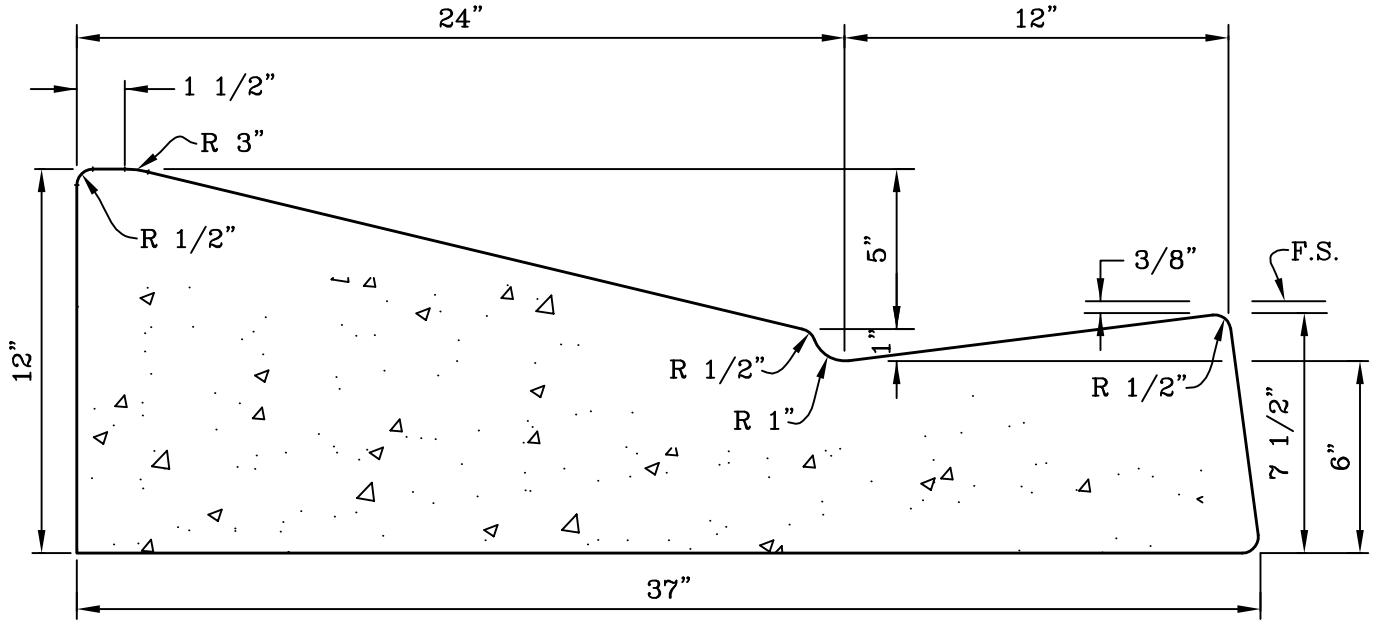

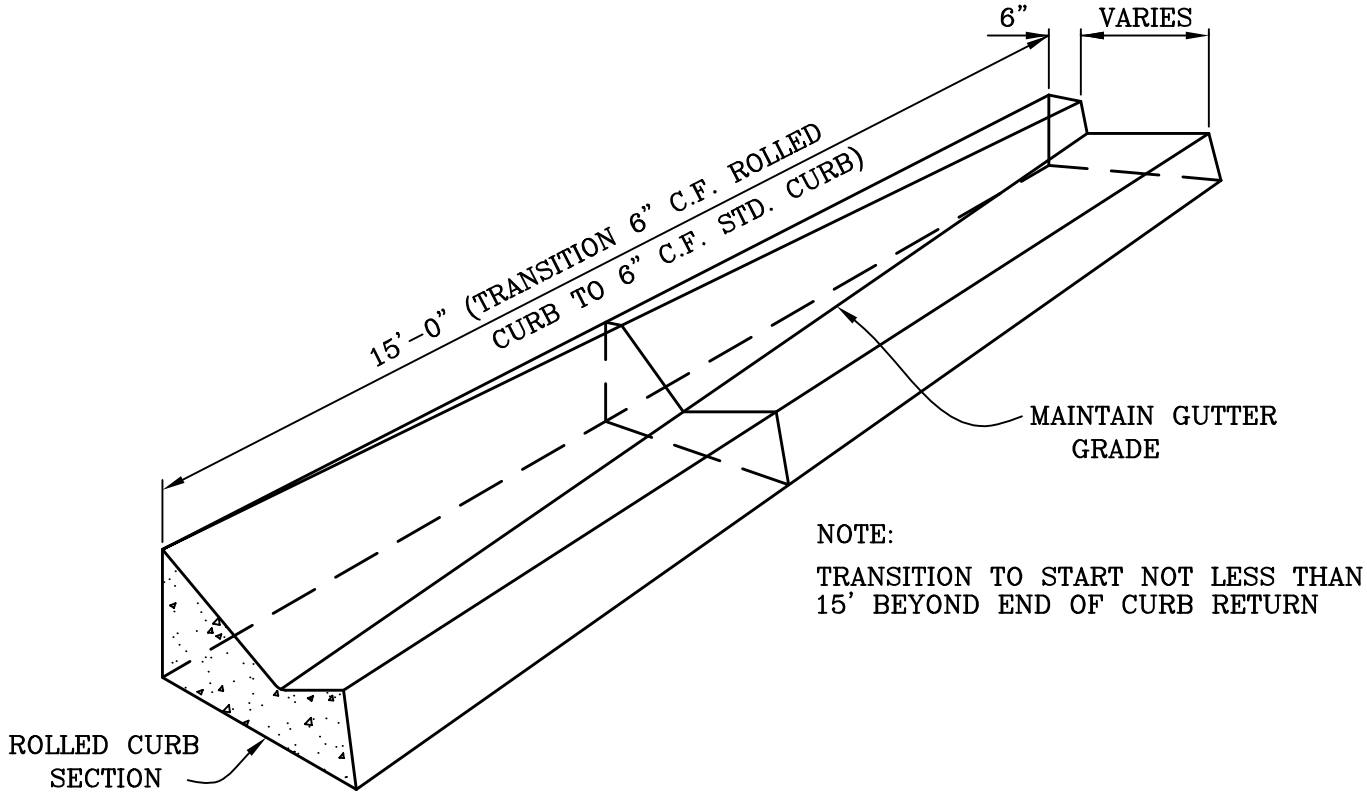

NOTE:

TRANSITION TO START NOT LESS THAN 15’ BEYOND END OF CURB RETURN

CITY OF MISSION VIEJO

CONCRETE ROLLED CURB (PRIVATE STREET)

STANDARD PLAN NO.

317

Roger Henderson 9-23-03

APPROVED RCE 30190 DATE

SHT 1 OF 1