CURB RETURN RADIUS	APPLICATION
25'	RESIDENTIAL STREET INTERSECTING ANOTHER RESIDENTIAL STREET
35'	ARTERIAL HIGHWAY INTERSECTING A RESIDENTIAL STREET OR ARTERIAL HIGHWAY INTERSECTING ANOTHER ARTERIAL HIGHWAY

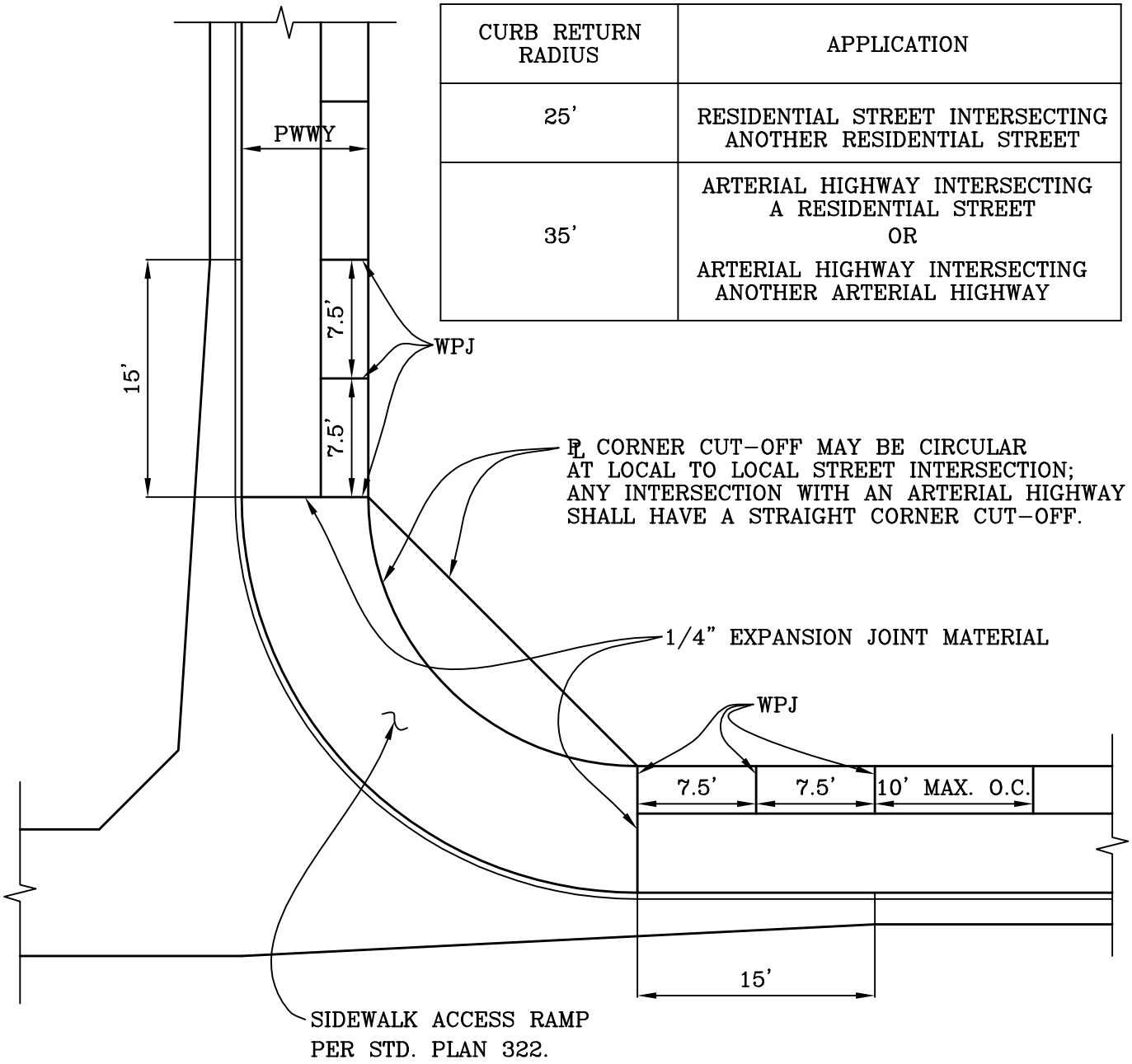

NOTE:
ELEVATION DIFFERENCE BETWEEN B.C.R. AND E.C.R. SHALL NOT EXCEED 4'.

CITY OF MISSION VIEJO

SIDEWALK RETURNS AND CURB RADIUS

STANDARD PLAN NO.

321

APPROVED | RCE 30190 | DATE 9-23-03

SHT 1 OF 3

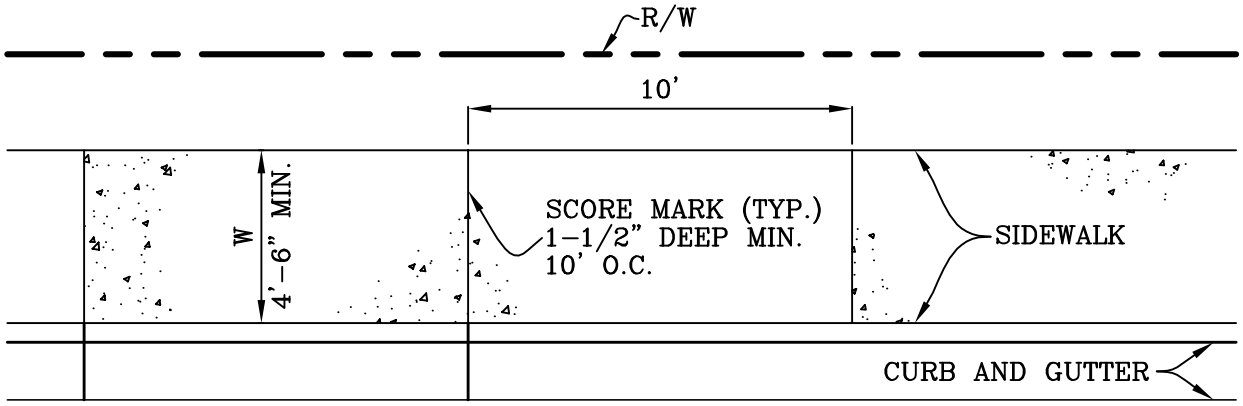

DETAIL 1

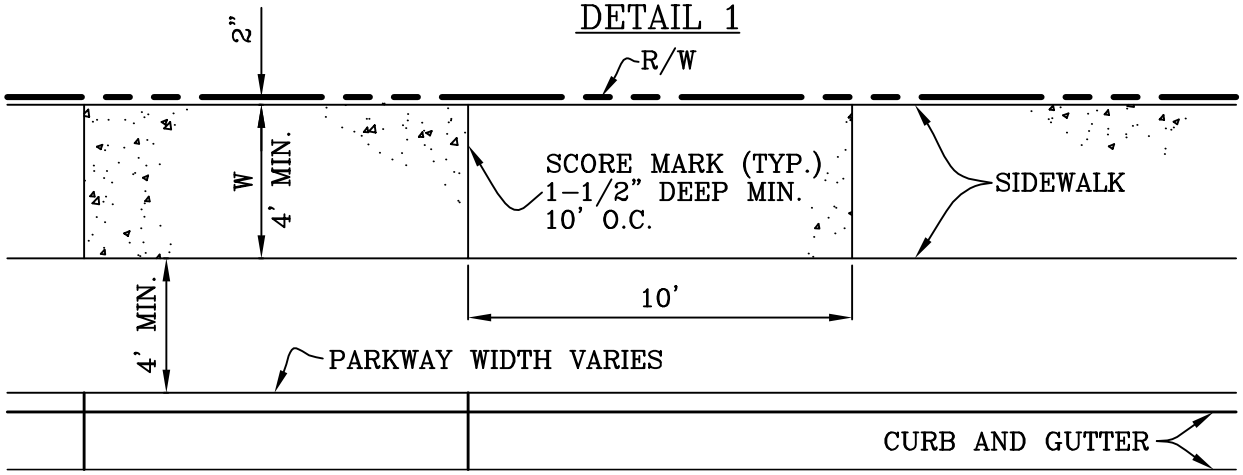

DETAIL 2

NOTES:

1. THICKNESS OF SIDEWALK SHALL BE 4" EXCEPT IN DRIVEWAY APRONS. (STD. 306).
2. CURB AND GUTTER SHALL HAVE 1/4" PREMOLDED EXPANSION JOINTS AT THE ENDS OF CURB RETURNS AND 1-1/2" DEEP WEAKENED PLANE JOINTS AT INTERVALS SHOWN HEREON. JOINTS SHALL HAVE EDGES WITH 1/8" RADII.
3. SEE SHEET 1 OF 3 FOR ADDITIONAL EXPANSION JOINT REQUIREMENTS.
4. SIDEWALK SHALL BE PORTLAND CEMENT CONCRETE TYPE V.
5. ALL SOILS SHALL BE BROUGHT TO MAXIMUM SATURATION AS REQUIRED IN THE APPROVED SOILS REPORT. THE SOILS ENGINEER SHALL PROVIDE CERTIFICATION ON THE FORM PROVIDED BY THE CITY STATING THE MOISTURE CONTENT HAS BEEN MAINTAINED AS REQUIRED PRIOR TO AND DURING THE PLACEMENT OF CONCRETE. IN HILLSIDE AREAS, SOIL SHALL BE SATURATED AS RECOMMENDED BY THE SOILS ENGINEER AND APPROVED BY THE CITY ENGINEER.
6. SIDEWALKS ARE REQUIRED ON THE SIDE OF STREETS WHERE PARKING IS ALLOWED (I.E. PARKING ONE SIDE, SIDEWALK ON THAT SIDE. PARKING BOTH SIDES, SIDEWALK ON BOTH SIDES.) WHERE NO PARKING IS ALLOWED, PEDESTRIAN CIRCULATION MUST BE PROVIDED EITHER WITH A SIDEWALK OR A GREENBELT PATHWAY.
7. PRE-EMERGENT WEED KILLERS MUST BE APPROVED PRIOR TO CONSTRUCTION OF SIDEWALK.

CITY OF MISSION VIEJO

MISSION VIEJO CALIFORNIA	SIDEWALK DETAILS	STANDARD PLAN NO. 321
	Kevin Henderson 9-23-03 APPROVED RCE 30190 DATE	SHT 2 OF 3

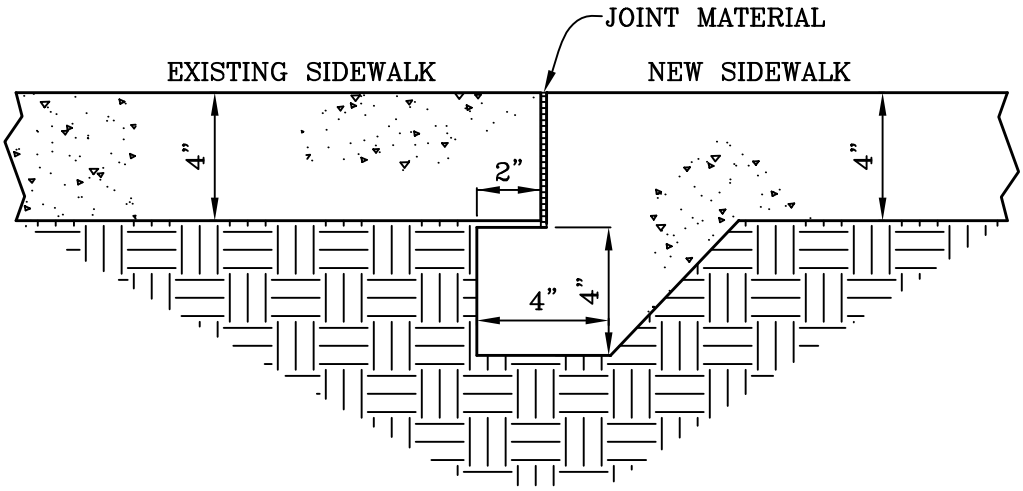

NOTES:

1. ALL APPLICABLE NOTES FROM SHEET 2 SHALL APPLY.
2. KEY NEW SIDEWALK SECTION UNDER EXISTING SIDEWALK.
3. PRESATURATION OF SOIL SHALL BE APPROVED BY INSPECTOR.

CITY OF MISSION VIEJO

SIDEWALK DETAILS

STANDARD PLAN NO.

321

9-23-03

APPROVED RCE 30190 DATE

SHT 3 OF 3