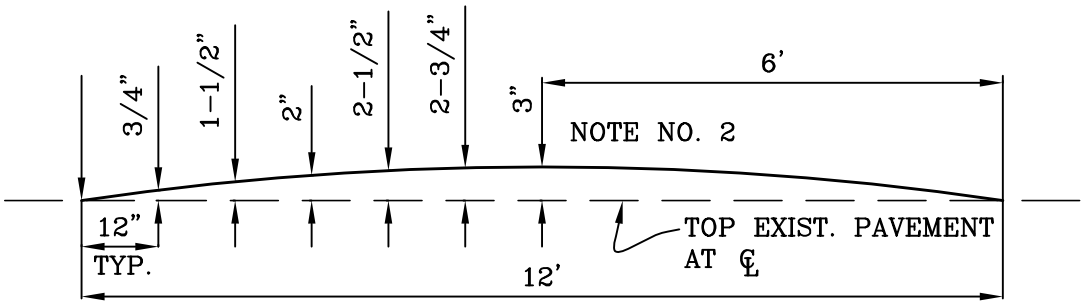

SECTION A–A

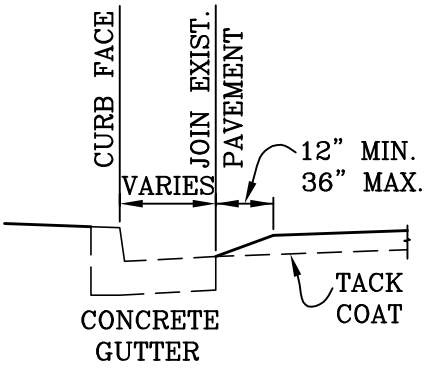

SECTION B–B

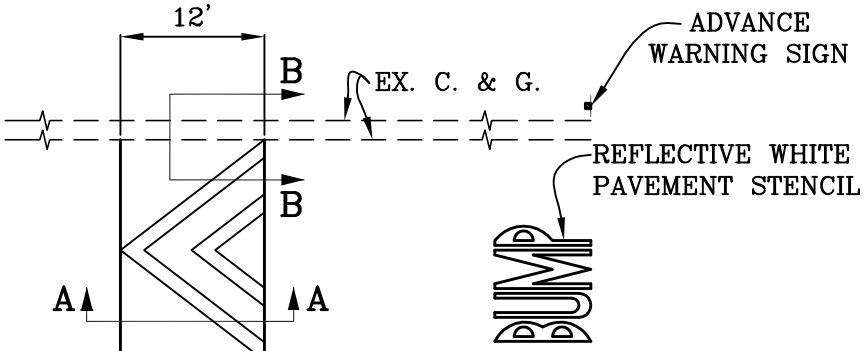

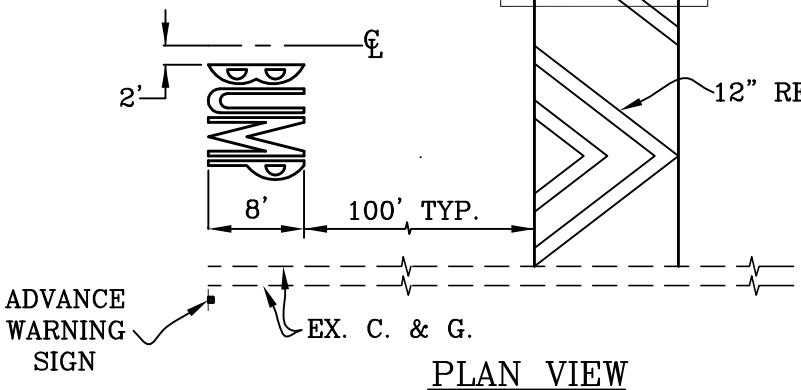

PLAN VIEW

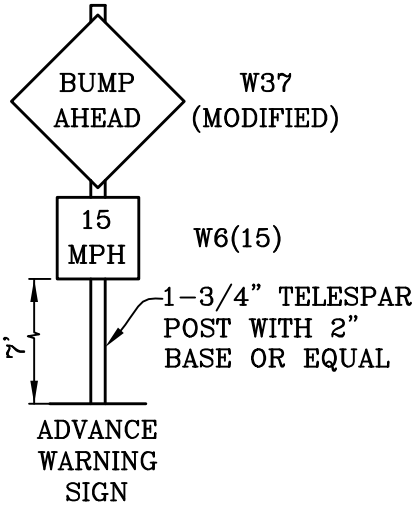

NOTES:

1. SPEED HUMPS SHALL BE LOCATED BY THE ENGINEER, AND/OR AS SHOWN ON PLAN.
2. SPEED HUMP SHALL BE CONSTRUCTED TO A HEIGHT OF 3" PLUS OR MINUS 1/4" AT THE MIDPOINT. THE CORRESPONDING SHAPE SHALL FOLLOW A CIRCULAR ARC (SEE SECTION A–A).
3. ASPHALT SHALL BE PLACED IN 2 LIFTS. 1" MINIMUM AT HIGHEST POINT.
4. ASPHALT SHALL BE TYPE III–C3–AR4000 (1/2") WITH 6% ASPHALT BINDER OR AS DIRECTED BY THE ENGINEER.

CITY OF MISSION VIEJO

SPEED HUMP

STANDARD PLAN NO.

345

9-23-03

APPROVED RCE 30190 DATE

SHT 1 OF 1