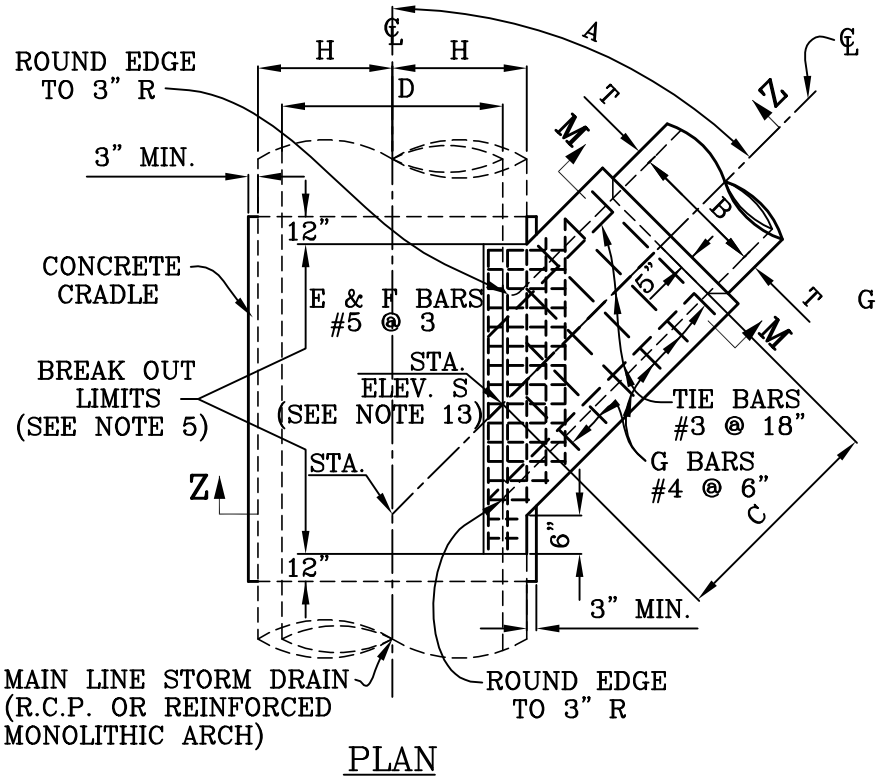

PLAN

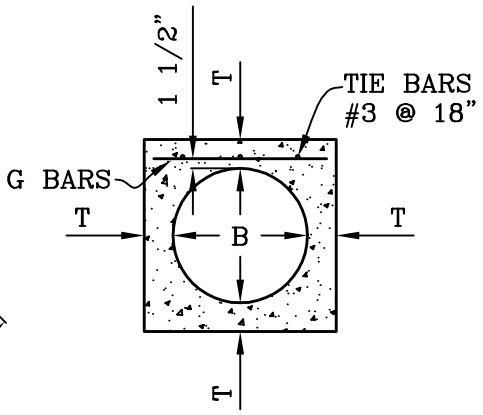

SECTION M–M

TABLE OF VALUES FOR T	
B	T
12"	6"
15"	6"
18"	6"
21"	6"
24"	7"
27"	7"
30"	7"
33"	7"
36"	7"
39"	7"

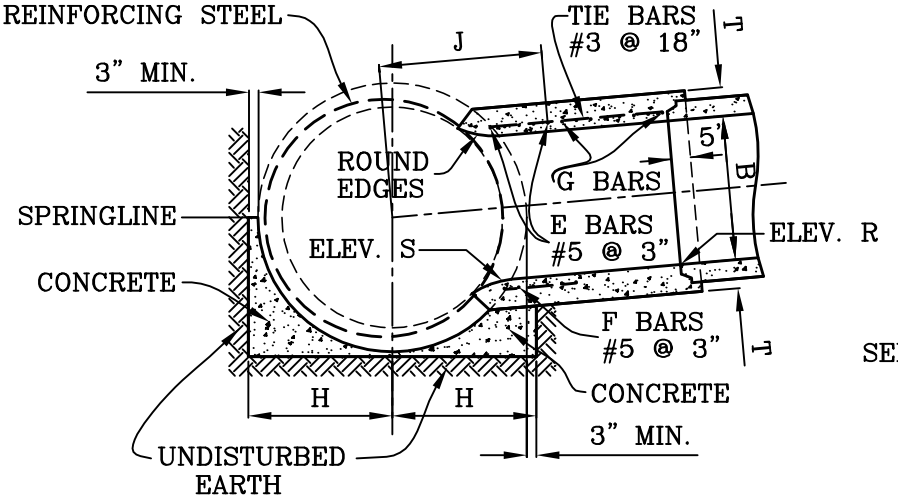

SECTION Z–Z

SEE NOTES ON SHEETS 2 AND 3

CITY OF MISSION VIEJO

JUNCTION STRUCTURE TYPE IV

STANDARD PLAN NO. 411

APPROVED RCE 30190 DATE 9-23-03

SHT 1 OF 3

NOTES:

1. JUNCTION STRUCTURE TYPE IV SHALL BE USED ONLY WHEN SUFFICIENT MEANS OF ACCESS IS AVAILABLE FOR STORM DRAIN MAINTENANCE.
2. JUNCTION STRUCTURE TYPE IV IS TO BE USED WHEN OD OF B IS GREATER THAN 1/2 THE ID OF D OR B IS LARGER THAN 24". B SHALL NOT EXCEED 3/4 OF D OR 39". WHERE B IS LESS THAN 24" USE TYPE IV OR TYPE VI. WHERE B EXCEEDS 3/4 D OR 39", USE JUNCTION STRUCTURE TYPE III WITHOUT MANHOLE.
3. VALUES OF A, B, C, AND D ARE SHOWN ON PROJECT DRAWINGS. ELEVATION "R" AND ELEVATION "S" ARE SHOWN WHEN REQUIRED PER NOTE 12.
4. ELEVATION "S" APPLIES AT INSIDE WALL OF STRUCTURE.
5. BREAKOUT LIMITS SHALL BE DETERMINED AS FOLLOW:
   UPSTREAM LIMIT–THE INTERSECTION OF THE OUTSIDE OF THE SPUR WALL WITH THE MAIN LINE PIPE WALL.
   DOWNSTREAM LIMIT–6" DOWNSTREAM OF THE INTERSECTION OF THE OUTSIDE OF THE SPUR WALL WITH THE MAIN LINE PIPE WALL.
   THE OPENING SHALL BE RECTANGULAR AND CUT NORMAL TO THE PIPE SURFACE WITHOUT DAMAGING REINFORCING STEEL. PROVIDE A CONCRETE ENCASEMENT 1' ABOVE THE TOP OF THE MAIN LINE PIPE TO THE LIMITS OF THE CONCRETE CRADLE IF A JOINT IN THE MAIN LINE PIPE FALLS WITHIN THE LIMIT OF THE CRADLE.
6. THE TRANSVERSE REINFORCEMENT IN PIPE SHALL BE CUT AT CENTER OF OPENING AND BENT INTO TOP AND BOTTOM SLABS OF SPUR.
7. THE MAIN LINE PIPE SHALL BE CRADLED AND ENCASED IN 1:3:5 MIX OF CONCRETE, EXTENDING LONGITUDINALLY 12" BEYOND THE LIMITS OF BREAKOUT (SEE NOTE 5); AND TRANSVERSELY A DISTANCE OF H ON EACH SIDE OF THE CENTERLINE OF PIPE. H=1/2 O.D. OF PIPE + 3" MIN. CRADLE MAY BE OMITTED ON SIDE OPPOSITE LATERAL INLET WHEN CONSTRUCTED IN CONNECTION WITH EXISTING STORM DRAIN.
8. REINFORCING STEEL SHALL BE PLACED 1 1/2" CLEAR FROM FACE OF CONCRETE, UNLESS OTHERWISE SHOWN.
9. E AND F BARS SHALL BE CARRIED TO A POINT NOT LESS THAN J DISTANCE FROM CENTERLINE. J = 7/12D + 6".
10. FLOOR OF STRUCTURE SHALL BE STEEL TROWELED TO SPRINGLINE.
11. WHEN JUNCTION STRUCTURE TYPE IV IS SPECIFIED WITH REINFORCED MONOLITHIC ARCH STORM DRAIN, VALUE D SHALL REFER TO THE CLEAR SPAN OF THE ARCH. REINFORCING STEEL SHALL BE CUT AND BENT INTO JUNCTION STRUCTURE IN THE SAME MANNER AS FOR PIPE. CONCRETE CRADLE UNDER REINFORCED MONOLITHIC ARCH IS NOT REQUIRED.
12. SIDE INLET PIPE SHALL ENTER MAIN LINE RADIALLY WHEN ELEVATIONS "R" AND "S" ARE NOT SHOWN ON PROJECT DRAWINGS. WHEN SIDE INLET PIPE ENTERS MAIN LINE OTHER THAN RADIALLY, ELEVATION "S" SHALL BE SHOWN ON PROJECT DRAWINGS AND SIDE INLET PIPE SHALL BE LAID ON A STRAIGHT GRADE FROM ELEVATION "S" TO CATCH BASIN OR GRADE BREAK IN LINE. ELEVATION "R" SHALL BE SHOWN ON PROJECT DRAWINGS ONLY WHEN STUB IS TO BE PROVIDED IN MAIN LINE FOR FUTURE SIDE INLET PIPE.

(NOTES CONTINUED ON SHEET 3)

CITY OF MISSION VIEJO

MISSION VIEJO CALIFORNIA 1988	JUNCTION STRUCTURE TYPE IV	STANDARD PLAN NO. 411
	Robert Henderson 9-23-03	
	APPROVED RCE 30190 DATE	SHT 2 OF 3

NOTES:

13. STATIONS SPECIFIED ON DRAWINGS APPLY AT THE INTERSECTION OF CENTERLINES OF MAIN LINE AND LATERALS, EXCEPT THAT STATIONS FOR CATCH BASIN CONNECTOR PIPE APPLY AT INSIDE OF STRUCTURE.

CITY OF MISSION VIEJO

	JUNCTION STRUCTURE TYPE IV	STANDARD PLAN NO. 411
	9-23-03 APPROVED RCE 30190 DATE	SHT 3 OF 3