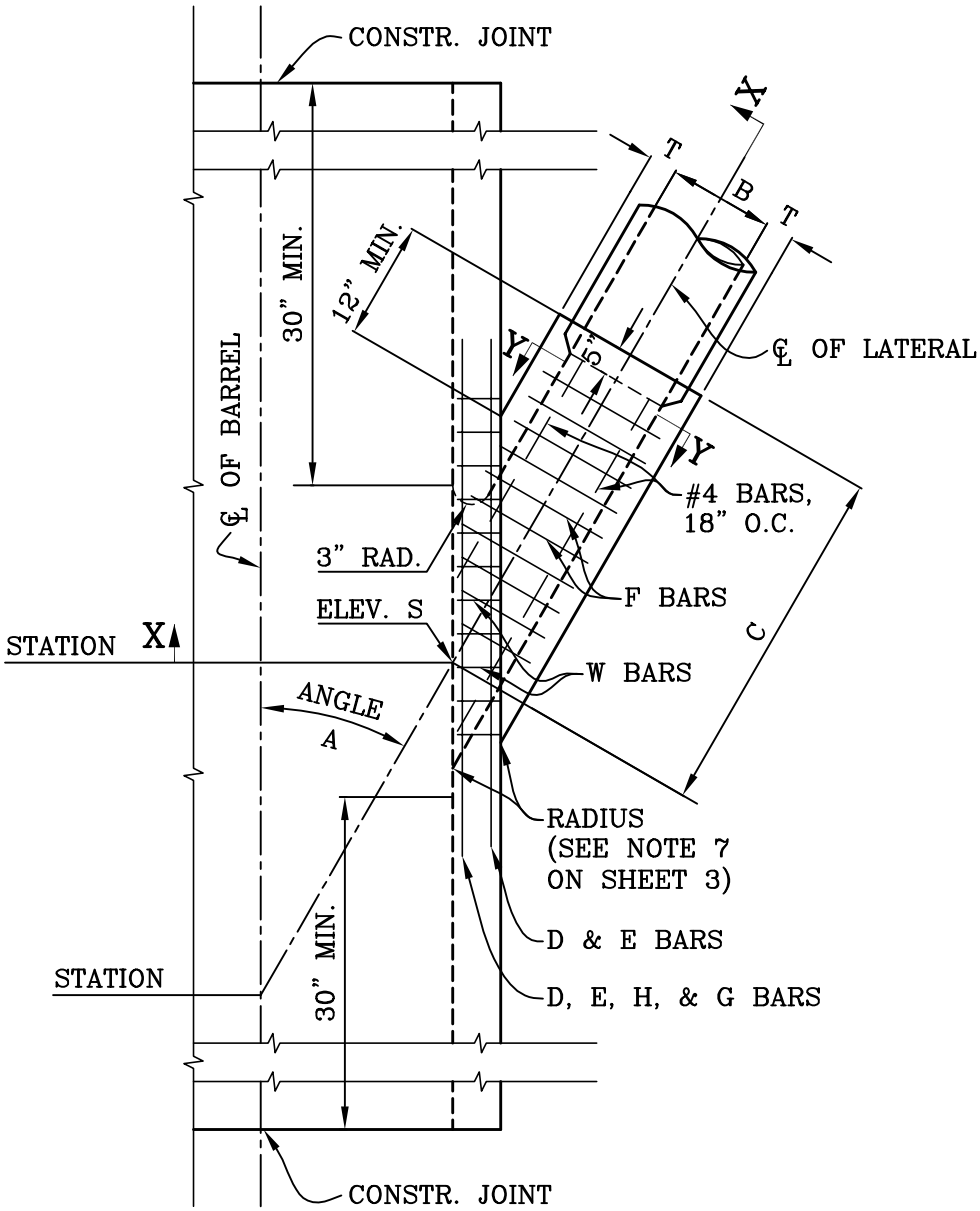

PLAN

SEE NOTES ON SHEET 3

CITY OF MISSION VIEJO

JUNCTION STRUCTURE–RCB
TYPE V

STANDARD PLAN NO.

412

9-23-03

APPROVED RCE 30190 DATE

SHT 1 OF 3

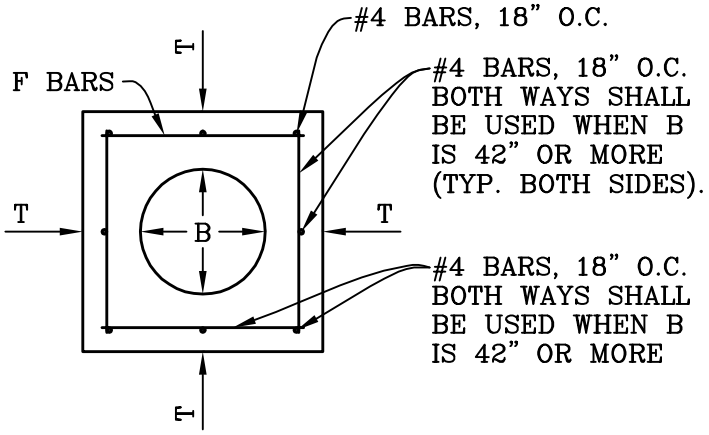

SECTION Y–Y

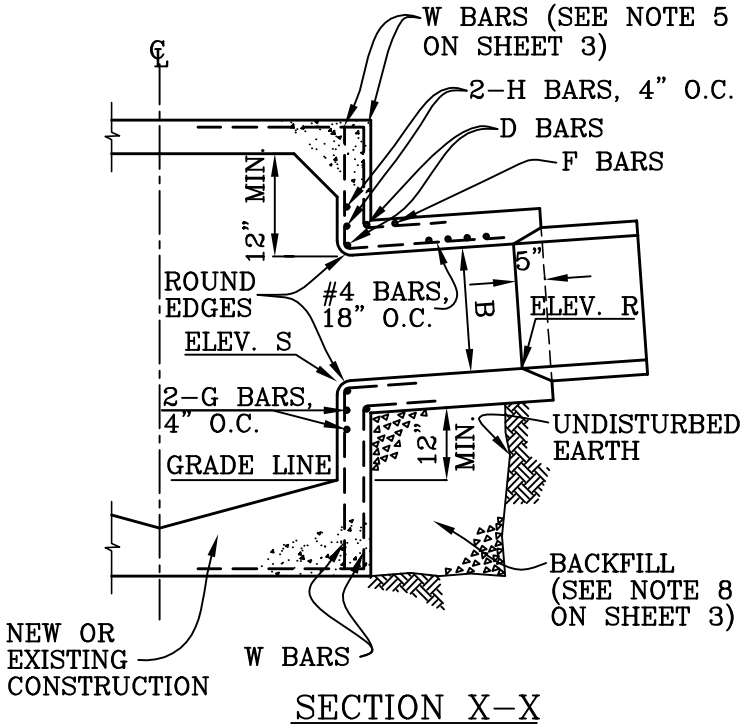

SECTION X–X

TABLE
FOR DIMENSIONS AND BAR SIZES

B (INCHES)	T (INCHES)	D.E.H. & G BARS	F BARS
12	4	# 5	# 4 @ 6" O.C.
15	6		
18	6		
21	6		
24	6		
27	6		
30	6		
33	8		
36	8		
39	8		
42	8	# 6	# 5 @ 6" O.C.
45	8		
48	8		
51	10		
54	10		
57	10		
60	10		
63	10		
66	12		
69	12		
72	12		
78	12		
84	14		
90	14	# 7	#6@6" O.C.

SEE SHEET 3 FOR NOTES

CITY OF MISSION VIEJO

JUNCTION STRUCTURE TYPE V

STANDARD PLAN NO.

412

APPROVED | RCE 30190 | DATE 9-23-03

SHT 2 OF 3

NOTES:

1. JUNCTION STRUCTURE TYPE V MAY BE USED WHEN B=96" OR LESS, ANGLE A=30 DEGREES OR MORE, BARREL WIDTH OF THE R.C.B. IS 20 FT. OR LESS, AND COVER OVER R.C.B. IS 10 FT. OR LESS.
2. VALUES OF B, C, ANGLE A, ELEVATIONS R AND S, AND STATION POINTS ARE AS SHOWN ON THE PLANS.
3. ALL STEEL REINFORCEMENT SHALL BE 1-1/2" CLEAR UNLESS OTHERWISE NOTED.
4. FOR PIPE SIZES NOT SHOWN, USE TABLED VALUES FOR NEXT LARGER PIPE.
5. W BARS ARE OF SIZE AND SPACING SPECIFIED FOR WALL STEEL ON PLAN, AND SHALL BE CUT IN CENTER OF OPENING AND BENT INTO TOP AND BOTTOM OF JUNCTION STRUCTURE.
6. FLOOR OF JUNCTION STRUCTURE SHALL BE STEEL TROWELED TO SPRINGLINE.
7. RADIUS VARIES FROM 3" AT ANGLE = 90 DEGREES TO RADIUS = B (36" MAX.) WHEN ANGLE A = 45 DEGREES OR LESS.
8. BACKFILL UNDER STRUCTURE WITH SLURRY CONTAINING 1-1/2 SACKS P.C.C./C.Y. BACKFILL MAY BE OMITTED IF STRUCTURE IS LAID ON UNDISTURBED EARTH TO STORM DRAIN WALL.
9. STORM DRAIN CONNECTOR PIPES SHALL BE 18" MINIMUM DIAMETER.
10. THE FLOWLINE OF ALL ENTRIES SHALL BE MADE IN THE LOWER 1/3 OF THE STRUCTURE.

CITY OF MISSION VIEJO

MISSION VIEJO CALIFORNIA 1988	JUNCTION STRUCTURE TYPE V	STANDARD PLAN NO. 412
	Kevin Henderson 9-23-03	
	APPROVED RCE 30190 DATE	SHT 3 OF 3