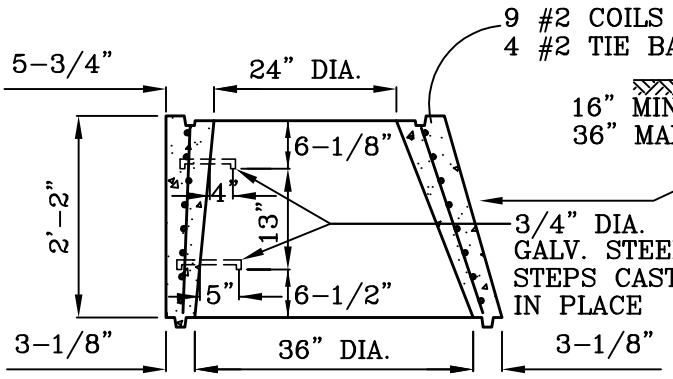

36" x 24" ECCENTRIC CONE

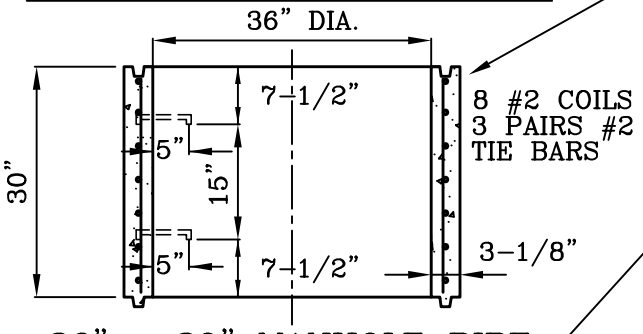

36" x 30" MANHOLE PIPE

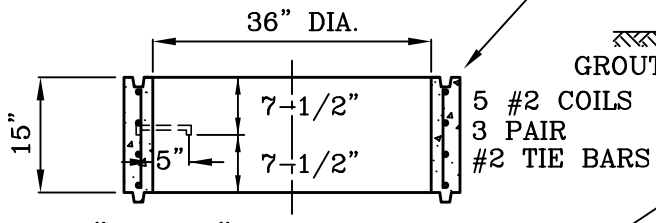

36" x 15" MANHOLE PIPE

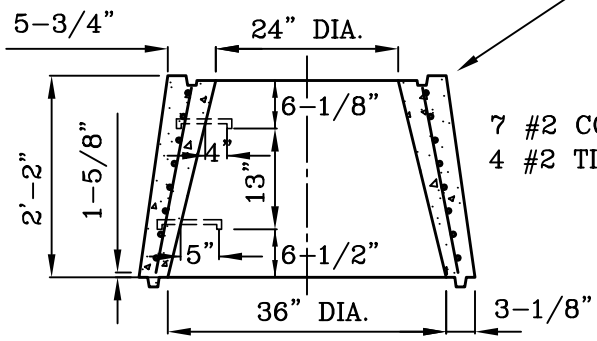

36" x 24" CONCENTRIC CONE

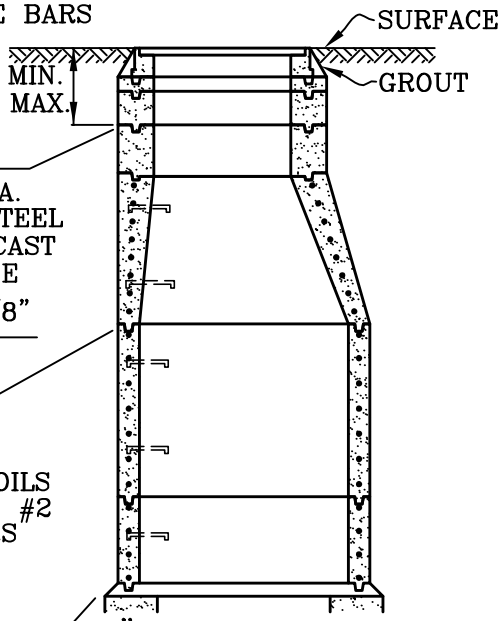

36" I.D. ECCENTRIC CONE MANHOLE TYPICAL SECTION

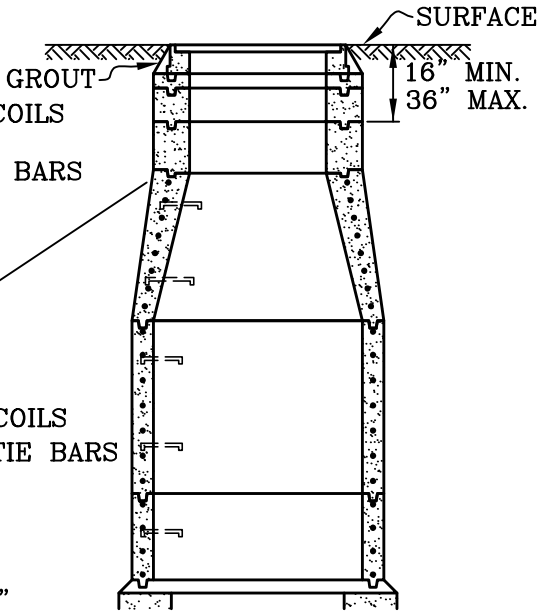

36" I.D. CONCENTRIC CONE MANHOLE TYPICAL SECTION

SEE SHEET 2 OF 2 OF STD. PLAN 426 FOR NOTES.

CITY OF MISSION VIEJO

36" REINFORCED CONCRETE MANHOLE

STANDARD PLAN NO.

418

Roger Henderson 9-23-03

APPROVED RCE 30190 DATE

SHT 1 OF 2

NOTES:

1. SEE STD. PLAN 424 FOR MANHOLE FRAME AND COVER DETAILS.
2. SEE STD. PLAN 422 FOR MANHOLE STEP DETAILS. MAX. SPACING = 17".
3. CONSTRUCTION SHALL BE IN ACCORDANCE WITH STANDARD SPECIFICATIONS FOR PUBLIC WORKS CONSTRUCTION.
4. THE MANHOLE PIPES AND GRADE RINGS SHALL BE ARRANGED IN ORDER OF LONGER TO SHORTER LENGTHS FROM BOTTOM TO TOP.
5. MANHOLE DETAILS SHALL BE SUBMITTED TO THE CITY ENGINEER FOR APPROVAL.
6. PAVEMENT SHALL BE FINISHED A MINIMUM OF 1/8" ABOVE THE MANHOLE FRAME.
7. TOP OF CONE SHALL BE PLACED A MINIMUM OF 6" BELOW BOTTOM OF ROADWAY STRUCTURAL SECTION OR A MINIMUM OF 16" BELOW FINISH GRADE, WHICHEVER IS GREATER.

CITY OF MISSION VIEJO

36" REINFORCED CONCRETE MANHOLE

STANDARD PLAN NO.

418

9-23-03

APPROVED RCE 30190 DATE

SHT 2 OF 2