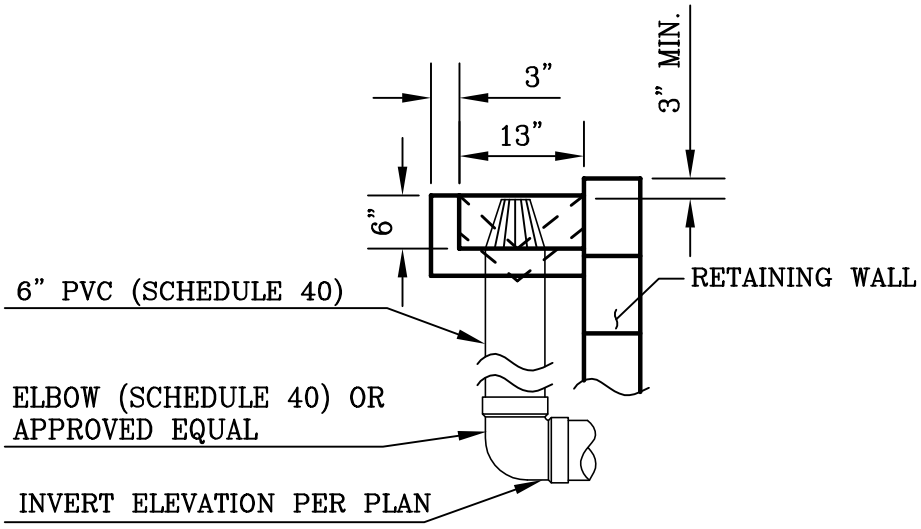

SECTION A–A

N.T.S.

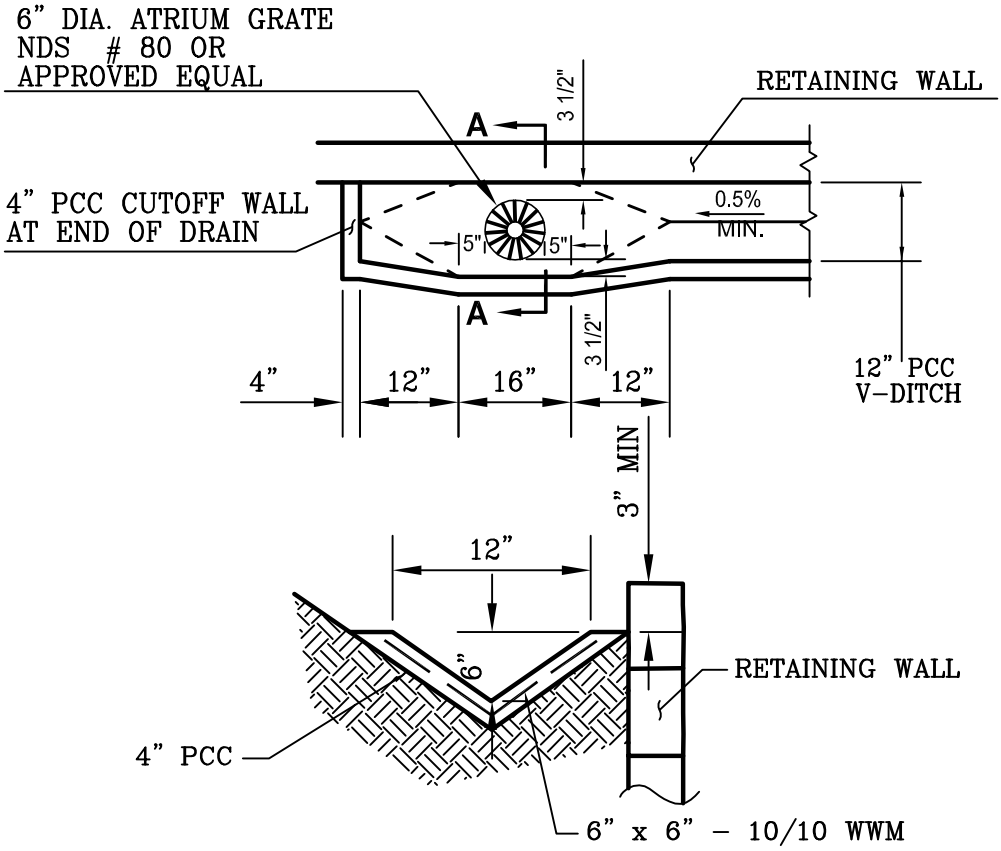

CITY OF MISSION VIEJO

RETAINING WALL V–DITCH

431

Rick Schlesinger 08/01/05

APPROVED BY: CITY ENGINEER RCE 51160 DATE

SHT 1 OF 1