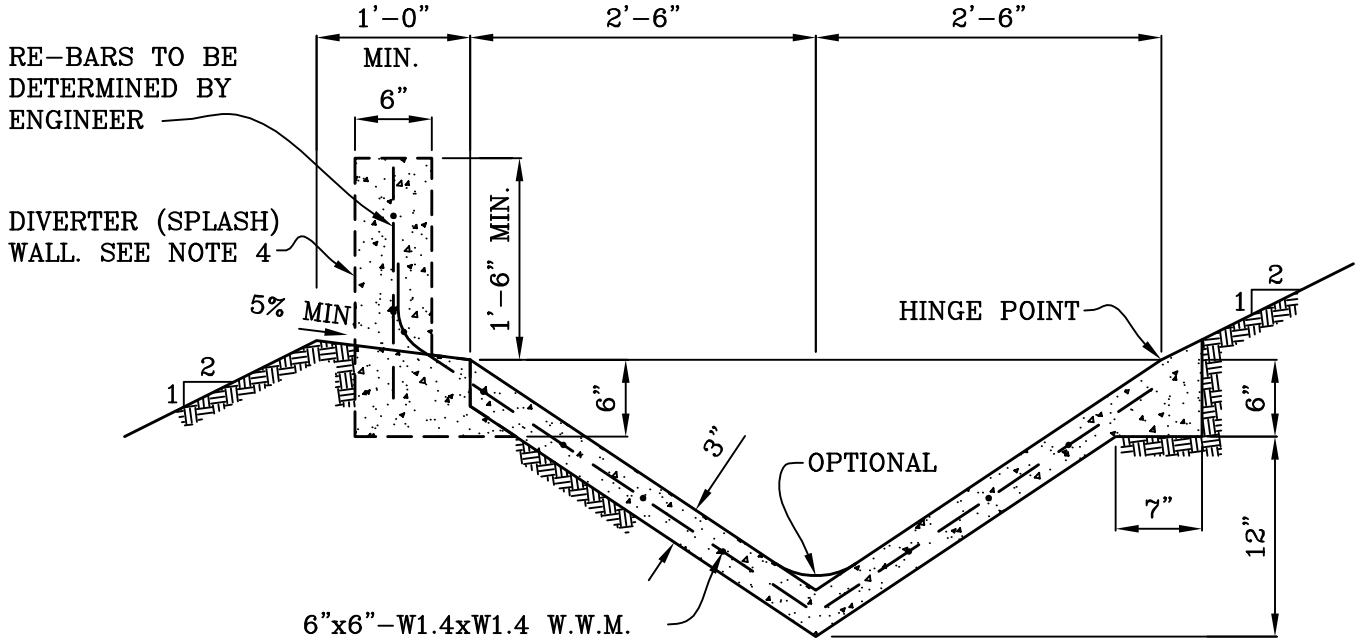

NOTES:

1. CONCRETE SHALL HAVE A MINIMUM ULTIMATE COMPRESSIVE STRENGTH AT 28 DAYS 2500 P.S.I. CONCRETE MAY BE PNEUMATICALLY PLACED AND SHALL CONFORM TO SECTION 2621 OF THE UNIFORM BUILDING CODE.

2. REINFORCING SHALL BE 6"x6"-W1.4xW1.4 WELDED WIRE MESH OR APPROVED EQUAL.

3. GROUND SHALL BE PRE-WETTED TO THE SATISFACTION OF THE INSPECTOR PRIOR TO PLACEMENT OF CONCRETE. MOISTURE LOSS RETARDENT SHALL BE USED WHEN REQUIRED BY THE INSPECTOR.

4. CONCRETE OR CONCRETE BLOCK DIVERTER (SPLASH) WALL TO BE CONSTRUCTED WHEN DOWNDRAIN TERMINATES AT TERRACE DRAIN. SEE PLAN FOR LOCATION DETAILS.

CITY OF MISSION VIEJO

TERRACE AND DOWN DRAINS

STANDARD PLAN NO.

439

Roger Henderson 9-23-03

APPROVED RCE 30190 DATE

SHT 1 OF 3

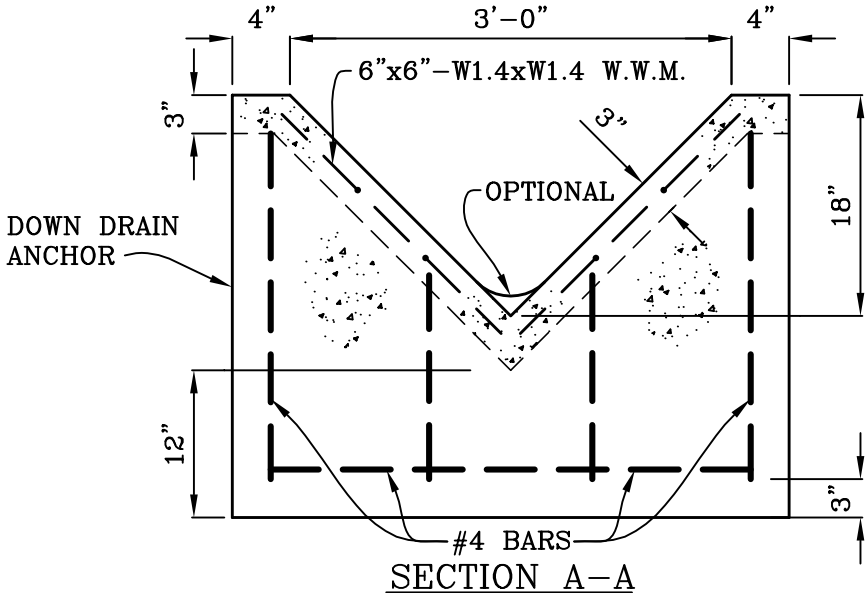

SECTION A-A

NOTES:

1. CONCRETE SHALL HAVE A MINIMUM ULTIMATE COMPRESSIVE STRENGTH AT 28 DAYS OF 2500 P.S.I. CONCRETE MAY BE PNEUMATICALLY PLACED AND SHALL CONFORM TO SECTION 2621 OF THE UNIFORM BUILDING CODE.
2. REINFORCING SHALL BE 6"x6"-W1.4xW1.4 WELDED WIRE MESH OR APPROVED EQUAL.
3. GROUND SHALL BE PRE-WETTED TO THE SATISFACTION OF THE INSPECTOR PRIOR TO PLACEMENT OF CONCRETE. MOISTURE LOSS RETARDENT SHALL BE USED WHEN REQUIRED BY THE INSPECTOR.

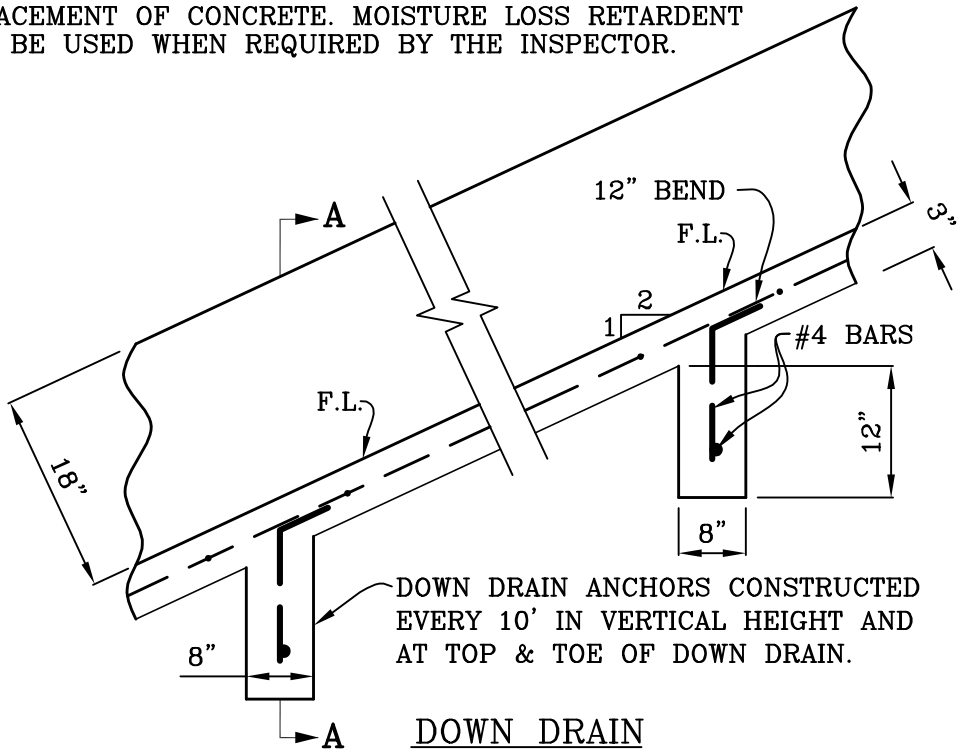

DOWN DRAIN

CITY OF MISSION VIEJO

MISSION VIEJO CALIFORNIA	TERRACE AND DOWN DRAIN	STANDARD PLAN NO. 439
	Robert Henderson 9-23-03	
	APPROVED RCE 30190 DATE	SHT 2 OF 3

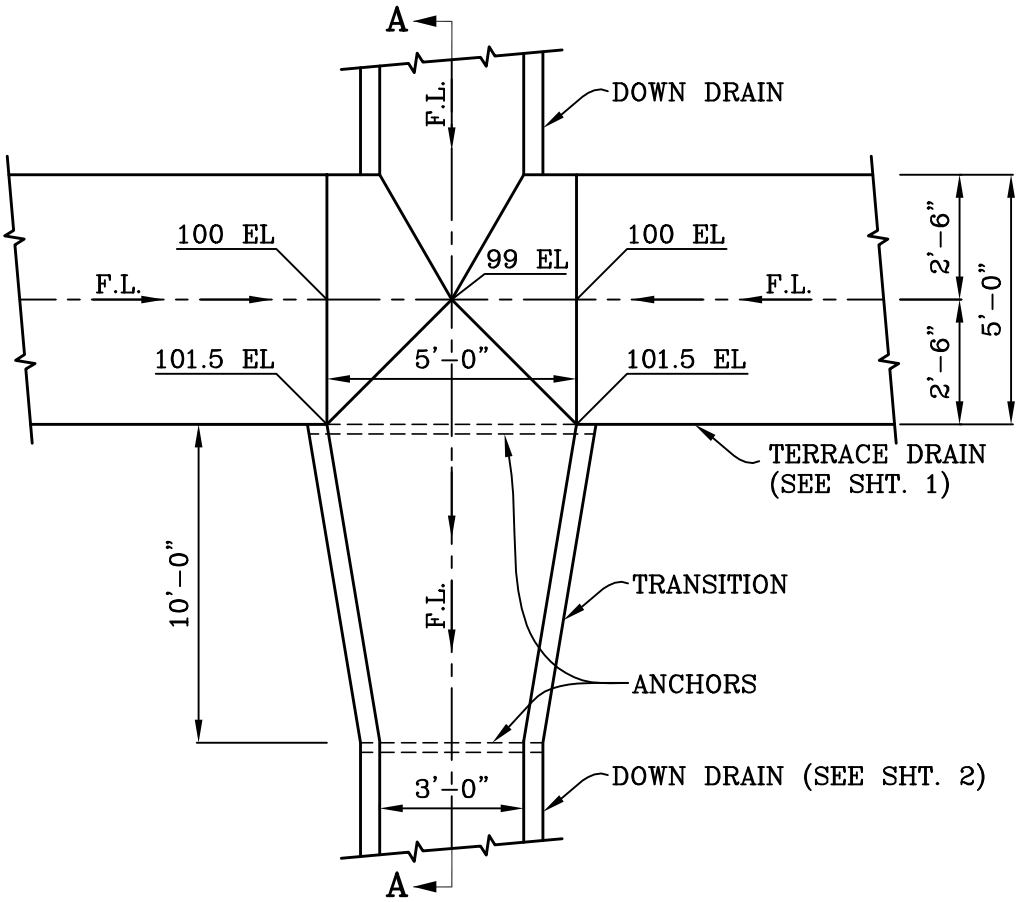

PLAN

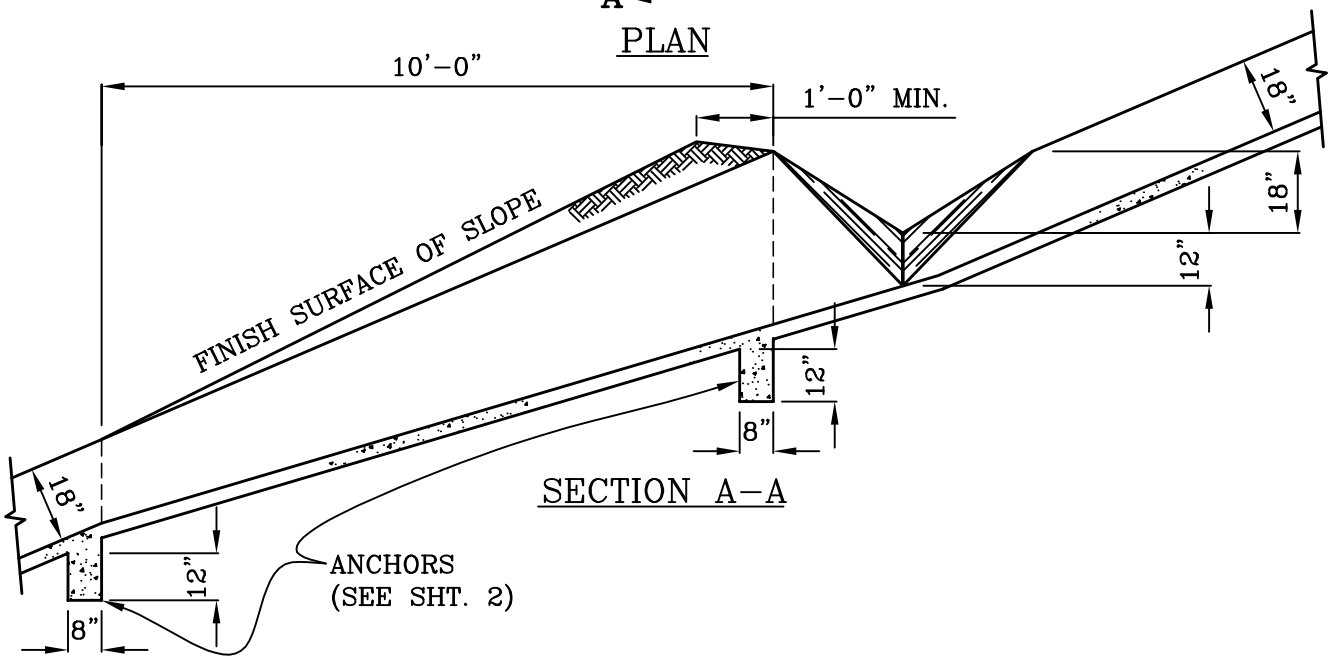

SECTION A-A

CITY OF MISSION VIEJO

MISSION VIEJO CALIFORNIA	TERRACE DRAIN & DOWN DRAIN INTERSECTION	STANDARD PLAN NO. 439
	Robert Henderson 9-23-03	
	APPROVED RCE 30190 DATE	SHT 3 OF 3