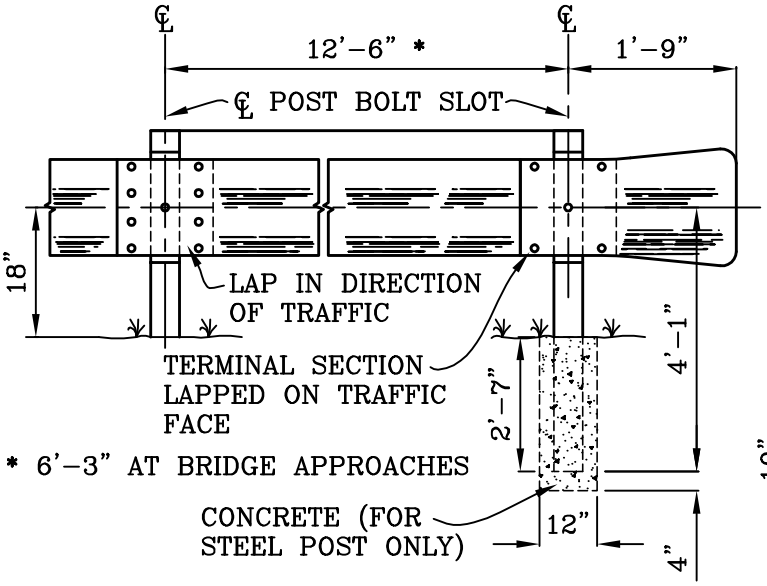


INSTALLATION

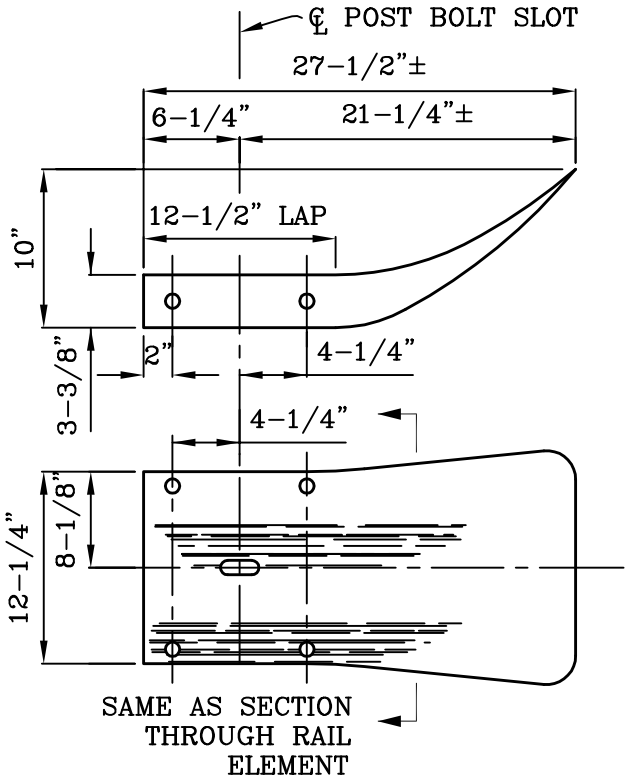


TERMINAL SECTION

NOTES:
1. GUARD RAILING FLARES AT BRIDGE APPROACHES SHALL HAVE A MINIMUM RADIUS OF 150 FT.
2. ALL DIMENSIONS ARE SUBJECT TO MANUFACTURING TOLERANCES.

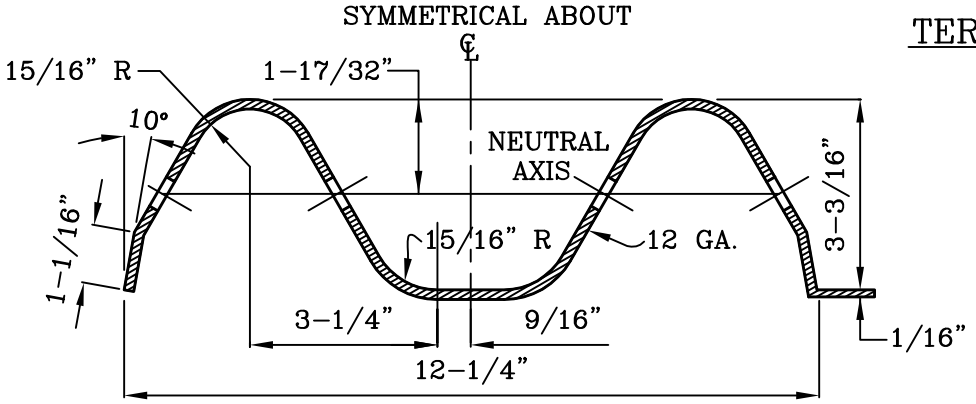


SECTION THROUGH RAIL ELEMENT

# CITY OF MISSION VIEJO

## METAL BEAM GUARD RAILING

STANDARD PLAN NO.

502

APPROVED | RCE 30190 | DATE 9-23-03

SHT 1 OF 2

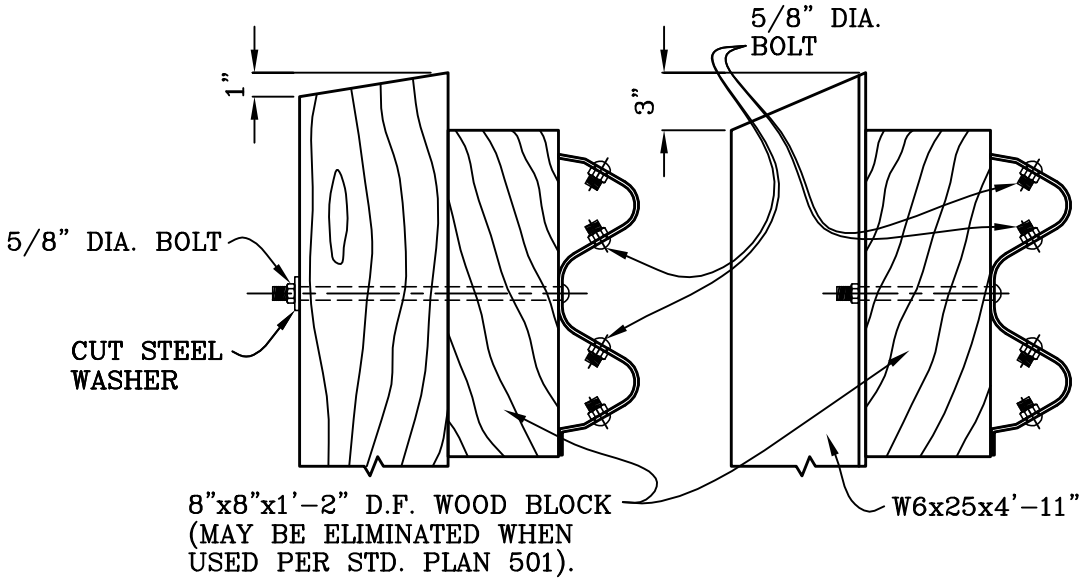


NOTE: SET STEEL RAIL POST IN 9" DIA.
HOLE & FILL WITH CONCRETE.

ARRANGEMENT OF BOLTS

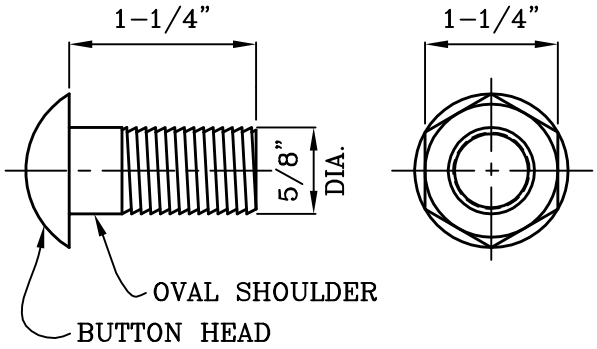


SPLICE BOLT AND NUT

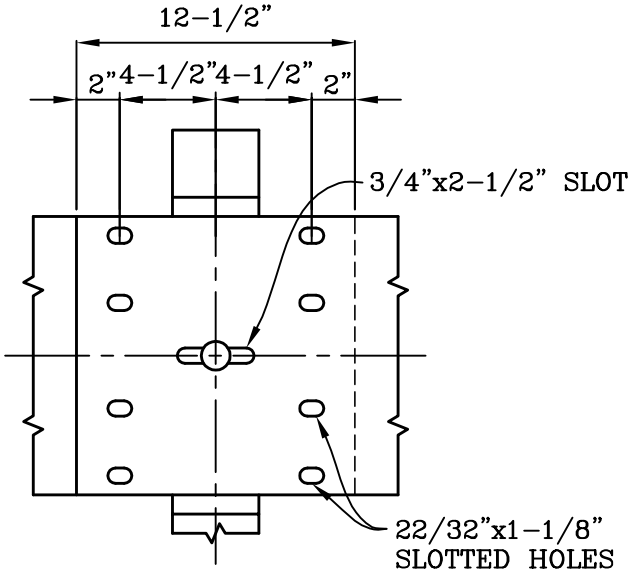


RAIL SPLICE

# CITY OF MISSION VIEJO

## METAL BEAM GUARD RAILING

STANDARD PLAN NO.

502

9-23-03

APPROVED RCE 30190 DATE

SHT 2 OF 2