CITY OF MISSION VIEJO

STANDARD PLANS

ADOPTED MARCH 14, 1994
RESOLUTION NO. 94-34

REVISED SEPTEMBER 23, 2003
REVISED AUGUST 1, 2005
REVISED AUGUST 17, 2012
REVISED NOVEMBER 11, 2015
REVISED FEBRUARY 12, 2018
REVISED FEBRUARY 1, 2022

MISSION VIEJO STANDARD PLANS

MISSION VIEJO 1988 CALIFORNIA

CITY OF MISSION VIEJO

TABLE OF CONTENTS

STANDARD PLAN NO.

MISSION VIEJO STANDARD PLANS

CITY OF MISSION VIEJO

TABLE OF CONTENTS

STANDARD PLAN NO.

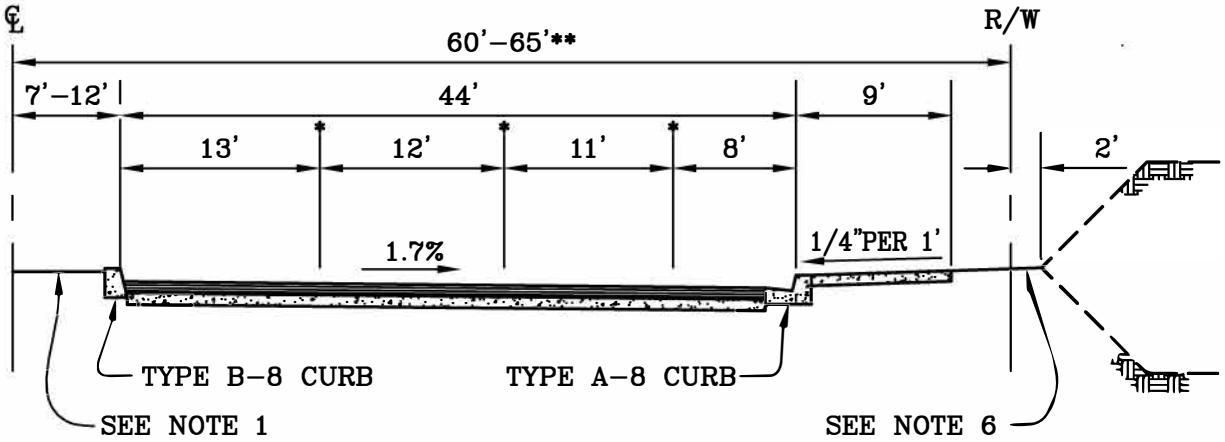

SECTION
SYMMETRICAL
ABOUT ℄

* LONGITUDINAL JOINT FOR FINISH A.C.

** ADDITIONAL RIGHT–OF–WAY MAY BE REQUIRED FOR DUAL LEFT TURN LANES, RIGHT TURN LANES, AND WHEN ARTERIAL HIGHWAY COINCIDES WITH AN ADOPTED ROUTE FOR AN ADDITIONAL PUBLIC FACILITY (I.E., PEDESTRIAN, TRANSIT, BICYCLE, OR EQUESTRIAN TRAIL) OR FOR A SCENIC HIGHWAY.

NOTES:
1. SEE LANDSCAPE GUIDELINES FOR MEDIAN DETAILS.
2. SEE STANDARD PLAN 316 FOR CURB DETAILS.
3. DESIGN SPEED SHALL BE A MINIMUM OF 60 MILES PER HOUR.
4. THICKNESS OF PAVEMENT TO BE APPROVED BY THE CITY ENGINEER.
5. SEE STANDARD PLAN 321 FOR SIDEWALK DETAILS.
6. DISTANCE SHOWN IS MINIMUM FROM RIGHT–OF–WAY TO HINGE POINT.
7. MINIMUM STREET FLOW LINE GRADE SHALL BE 0.5% REVERSE GRADE VERTICAL CURVES EXCEPTED.
8. CHECK HORIZONTAL AND VERTICAL SIGHT DISTANCE FOR INTERSECTING STREETS PER DESIGN SPEED AND STANDARD PLAN 315.
9. PARKING RESTRICTIONS ASSUMED ON BOTH SIDES OF ARTERIALS PER CITY GENERAL PLAN, SIGNING WILL BE REQUIRED PER CITY DIRECTION AND STANDARD PLANS 325 & 328 FOR SIGN INSTALLATION DETAILS.

CITY OF MISSION VIEJO

MISSION VIEJO CALIFORNIA 1988

MAJOR HIGHWAY

STANDARD PLAN NO.

301

Kevin Henderson 9-23-03

APPROVED RCE 30190 DATE

SHT 1 OF 1

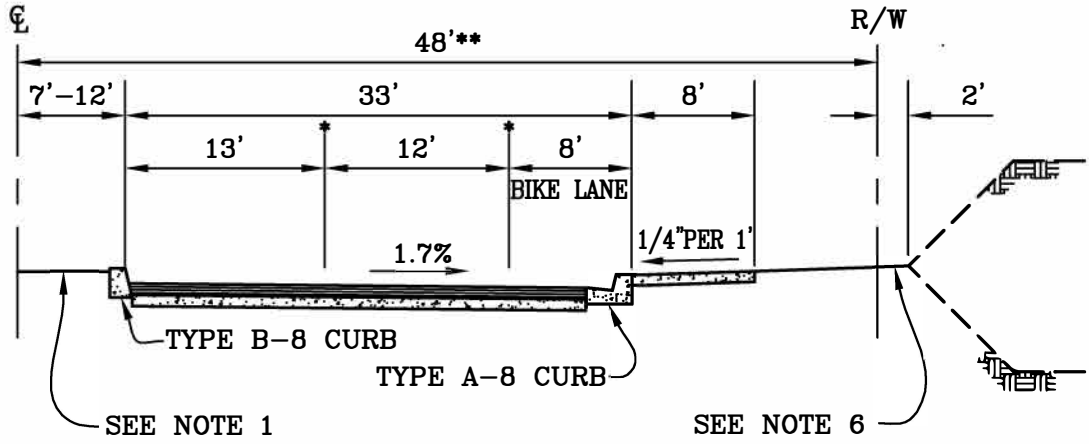

SECTION
SYMMETRICAL
ABOUT ℄

* LONGITUDINAL JOINT FOR FINISH COURSE S.C. TO ALIGN WITH LANE STRIPING.

** ADDITIONAL RIGHT–OF–WAY MAY BE REQUIRED FOR DUAL LEFT TURN LANES, RIGHT TURN LANES, AND WHEN ARTERIAL HIGHWAY COINCIDES WITH AN ADOPTED ROUTE FOR AN ADDITIONAL PUBLIC FACILITY (I.E., PEDESTRIAN, BICYCLE, TRANSIT OR EQUESTRIAN TRAIL), OR FOR A SCENIC HIGHWAY.

NOTES:

1. SEE LANDSCAPE GUIDLINES FOR MEDIAN DETAILS.
2. SEE STANDARD PLAN 316 FOR CURB DETAILS.
3. DESIGN SPEED SHALL BE A MINIMUM OF 55 MILES PER HOUR.
4. THICKNESS OF PAVEMENT TO BE APPROVED BY THE CITY ENGINEER.
5. SEE STANDARD PLAN 321 FOR SIDEWALK DETAILS.
6. DISTANCE SHOWN IS MINIMUM FROM RIGHT–OF–WAY TO HINGE POINT.
7. MINIMUM STREET FLOW LINE GRADE SHALL BE 0.5% REVERSE GRADE VERTICAL CURBS EXCEPTED.
8. CHECK HORIZONTAL AND VERTICAL SIGHT DISTANCE FOR INTERSECTING STREETS PER DESIGN SPEED AND STANDARD PLAN 315.
9. PARKING RESTRICTIONS ASSUMED ON BOTH SIDES OF ARTERIALS PER CITY GENERAL PLAN, SIGNING WILL BE REQUIRED PER CITY DIRECTION AND STANDARD PLANS 325 & 328 FOR SIGN INSTALLATION DETAILS.

CITY OF MISSION VIEJO

MISSION VIEJO CALIFORNIA	PRIMARY HIGHWAY	STANDARD PLAN NO. 302
	Roger Henderson 9-23-03 APPROVED RCE 30190 DATE	SHT 1 OF 1

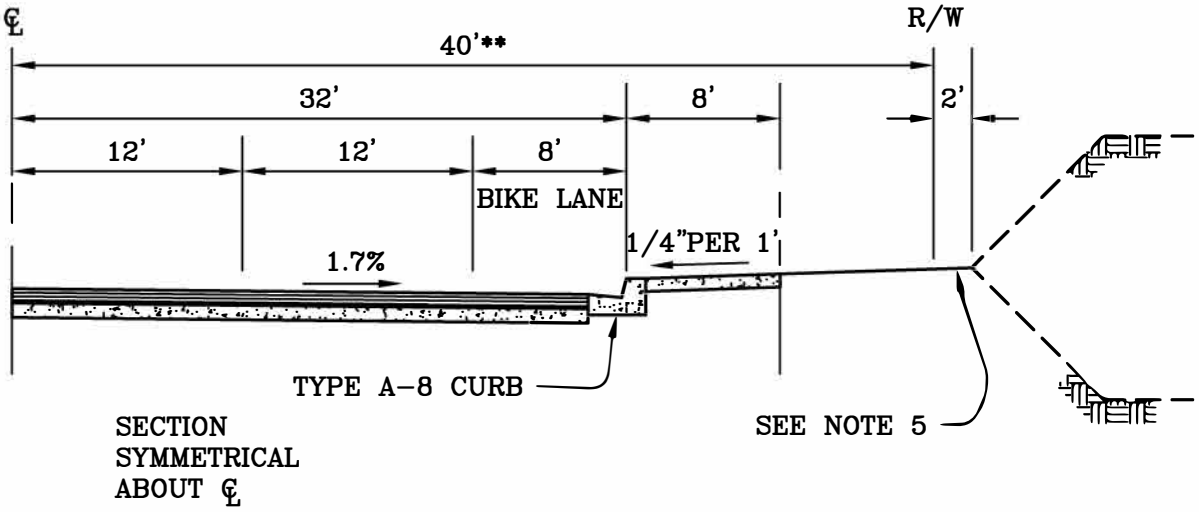

** ADDITIONAL RIGHT-OF-WAY MAY BE REQUIRED WHEN AN ARTERIAL HIGHWAY COINCIDES WITH AN ADOPTED ROUTE FOR AN ADDITIONAL PUBLIC FACILITY (I.E., PEDESTRIAN, BICYCLE, OR EQUESTRIAN TRAIL), OR FOR A SCENIC HIGHWAY.

NOTES:

1. DESIGN SPEED SHALL BE A MINIMUM OF 50 MILES PER HOUR.
2. THICKNESS OF PAVEMENT TO BE APPROVED BY THE CITY ENGINEER.
3. SEE STD. PLAN 316 FOR TYPE A CURB.
4. SEE STD. PLAN 321 FOR SIDEWALK DETAILS.
5. DISTANCE SHOWN IS MINIMUM FROM R/W TO HINGE POINT.
6. MINIMUM STREET FLOW LINE GRADE SHALL BE 0.5%, REVERSE GRADE VERTICAL CURVES EXCEPTED.
7. CHECK HORIZONTAL AND VERTICAL SIGHT DISTANCE OF ALL INTERSECTING STREETS PER DESIGN SPEED AND STD. PLAN 315.
8. PARKING RESTRICTIONS ASSUMED ON BOTH SIDES OF ARTERIALS PER CITY GENERAL PLAN, SIGNING WILL BE REQUIRED PER CITY DIRECTION AND STANDARD PLANS 325 AND 328 FOR SIGN INSTALLATION DETAILS.

CITY OF MISSION VIEJO

SECONDARY HIGHWAY

STANDARD PLAN NO.

303

Kevin Henderson 9-23-03

APPROVED RCE 30190 DATE

SHT 1 OF 1

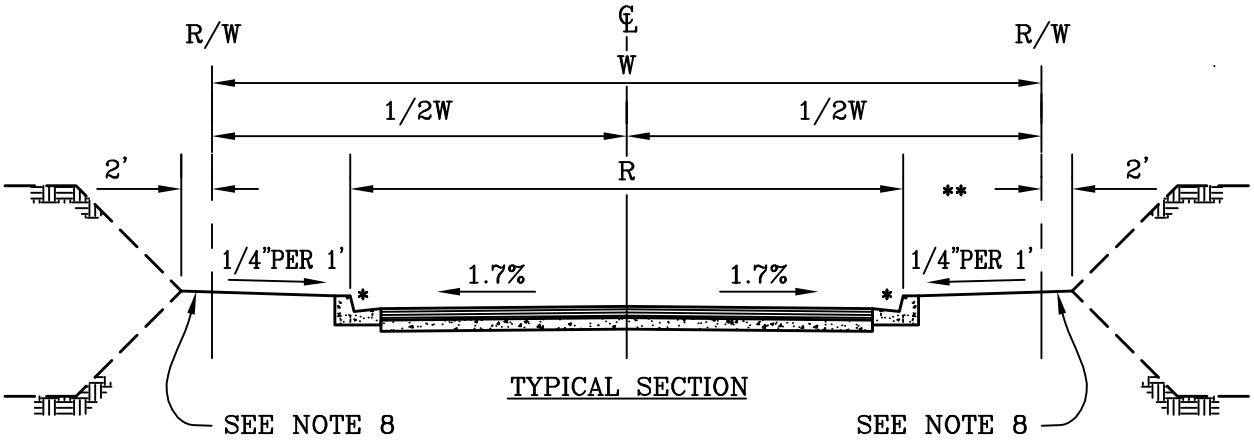

TYPICAL SECTION

LEGEND

W = WIDTH OF RIGHT-OF-WAY

R = WIDTH OF ROADWAY IN FEET

P = WIDTH OF PARKWAY IN FEET

CLASSIFICATION	TYPICAL ACCESS BY:	PARKING ALLOWED	MIN. DESIGN SPEED	W	R	SIDEWALK
INDUSTRIAL COLLECTOR	INDUSTRIAL LOCAL STREET DRIVEWAY BOTH SIDES	BOTH SIDES	35	74	64	BOTH SIDES
INDUSTRIAL LOCAL-a	INDUSTRIAL LOCAL STREET DRIVEWAY BOTH SIDES	BOTH SIDES	25	54	44	BOTH SIDES
COMMUTER	LOCAL STREETS	BOTH SIDES	35-45	56	40	BOTH SIDES
COLLECTOR	LOCAL STREETS	BOTH SIDES	35	56	40	BOTH SIDES
LOCAL	LOCAL STREETS DRIVEWAY ONE SIDE	BOTH SIDES	25	52	36	BOTH SIDES
LOCAL	LOCAL STREETS DRIVEWAY BOTH SIDES	BOTH SIDES	25	56	40	BOTH SIDES
LOCAL	DRIVEWAY BOTH SIDES	BOTH SIDES	25	52	36	BOTH SIDES
LOCAL-b	DRIVEWAY ONE SIDE	ONE SIDE	25	38.5	30	ONE SIDE
LOCAL-b	DRIVEWAY ONE SIDE	NONE	25	36.5	28	ONE SIDE

* INDUSTRIAL COLLECTOR CURBS SHALL BE TYPE "A-8", SPECIAL CONDITIONS MAY REQUIRE OTHER TYPES.

** ON SIDE WITH NO SIDEWALK, R/W IS AT BACK OF CURB.

SEE SHT. 2 FOR NOTES

CITY OF MISSION VIEJO

COLLECTOR, COMMUTER AND LOCAL STREETS

STANDARD PLAN NO.

304

9-23-03

APPROVED RCE 30190 DATE

NOTES:

1. SIDEWALKS, IN ADDITION TO THOSE INDICATED ABOVE, MAY BE REQUIRED TO PROVIDE CONTINUOUS PEDESTRIAN ROUTES.

2. REQUIRED PAVEMENT STRUCTURAL SECTION SHALL BE DETERMINED BY THE SOILS ENGINEER AND APPROVED BY THE CITY ENGINEER.

3. CURB SHALL BE TYPE A-6 EXCEPT FOR INDUSTRIAL COLLECTOR STREETS.

4. SEE STD. PLAN 316 FOR TYPE A-6 CURB DETAIL.

5. SEE STD. PLAN 321 FOR SIDEWALK DETAILS.

6. BASIC CRITERIA; 12' LANES FOR VOLUMES GREATER THAN 500 A.D.T.
   10' TRAVEL LANES FOR LESS THAN 500 A.D.T.

a. ROADWAY "R" SHALL BE INCREASED TO 50' WITHIN 100' OF CURB RETURN OF AN INTERSECTION WITH A HIGHER CLASSIFICATION HIGHWAY. CURB AND GUTTER TRANSITION SHALL BE CONSTRUCTED BETWEEN 100' AND 140' FROM CURB RETURN.

b. 8' PARKWAY ON DRIVEWAY SIDE. R/W AT BACK OF CURB ON SIDE WITHOUT ACCESS. PAVEMENT CROWN LINE SHALL BE CENTERED BETWEEN CURBS.

7. MIN. STREET FLOW GRADE LINE SHALL BE 0.5%. REVERSE GRADE VERTICAL CURVES EXCEPTED.

8. DISTANCE SHOWN IS MINIMUM FROM R/W TO HINGE POINT WHEN SIDEWALK IS ADJACENT TO R/W AND/OR HINGE POINT IS FOR A DOWN SLOPE. WHEN HINGE POINT IS FOR AN UP SLOPE AND WHEN SIDEWALK IS ADJACENT TO CURB, HINGE POINT SHALL BE LOCATED AT R/W OR A MINIMUM OF 2 FEET BEHIND SIDEWALK, WHICHEVER IS THE GREATER DISTANCE FROM THE CURB FACE.

9. ALL LOCAL STREETS, PRIVATE AND PUBLIC, SHALL BE DESIGNED AND CONSTRUCTED IN COMPLIANCE WITH THE REQUIREMENTS OF THIS AND ALL OTHER APPLICABLE STANDARD PLANS, UNLESS OTHERWISE APPROVED BY THE CITY ENGINEER.

10. DESIGN SPEED FOR LOCAL STREETS WITH RESIDENTIAL FRONTAGE SHALL BE 25 MILES PER HOUR, AND MAX. GRADE SHALL BE 10%. DESIGN SPEED FOR STREETS WITHOUT RESIDENTIAL FRONTAGE SHALL BE 35 MILES PER HOUR. STREET ALIGNMENT AND PROFILE SHALL COMPLY WITH THE CRITERIA FOR SAFE STOPPING SIGHT DISTANCE IN CONFORMANCE WITH THE CALIFORNIA STATE HIGHWAY DESIGN MANUAL FOR THESE DESIGN SPEEDS.

11. STREETS SHALL INTERSECT AT RIGHT ANGLES WHEREVER POSSIBLE. STREETS SHALL NOT INTERSECT AT GREATER THAN 15° SKEW TO A RIGHT ANGLE. FOUR-LEGGED INTERSECTIONS SHALL BE AVOIDED EXCEPT AT SIGNALIZED LOCATIONS. INTERSECTIONS SHALL HAVE ADEQUATE SIGHT DISTANCE IN CONFORMANCE WITH THE STD. PLAN 315. INTERSECTIONS ON CREST VERTICAL CURVES OR ON THE INSIDE OF HORIZONTAL CURVES SHALL BE AVOIDED. THE MINIMUM DISTANCE BETWEEN INTERSECTIONS SHALL BE 150 FEET MEASURED FROM THEIR CENTERLINES.

CITY OF MISSION VIEJO

COLLECTOR, COMMUTER AND LOCAL STREET NOTES

STANDARD PLAN NO.

304

9-23-03

APPROVED RCE 30190 DATE

NOTES:

1. PRIVATE STREET WIDTHS AND GEOMETRICS SHALL BE DESIGNED TO PUBLIC STREET STANDARDS.

2. SIDEWALKS SHALL BE PROVIDED ON ALL PRIVATE STREETS IN CONFORMANCE WITH STD. PLAN 321 UNLESS ALTERNATE PEDESTRIAN CIRCULATION SYSTEM IS PROVIDED MEETING THE APPROVAL OF THE CITY ENGINEER.

3. REQUIRED PAVEMENT STRUCTURAL SECTION SHALL BE DETERMINED BY THE SOILS ENGINEER AND APPROVED BY THE CITY ENGINEER.

4. ENTRYWAYS TO PRIVATE TRACTS SHALL BY DESIGNED TO EMPHASIZE THEIR PRIVATE STATUS. TEXTURED CONCRETE, ARCHES, GUARD GATES OR OTHER ACCESS CONTROL SHALL BE REQUIRED AT TRANSITION FROM PUBLIC TO PRIVATE STREET. ENTRY GATES SHALL BE SET BACK FROM STORAGE FOR ENTERING VEHICLES TO ALLOW STACKING WITHOUT INTERFERING WITH THROUGH TRAFFIC. MINIMUM DESIGN CRITERIA AND REQUIRED FEATURES FOR GUARD GATES ARE SHOWN BELOW.

5. D=1' PER DWELLING UNIT SERVED, 100' MINIMUM (MULTIPLE LANES MAY BE USED TO SATISFY STORAGE DISTANCE REQUIREMENTS.)

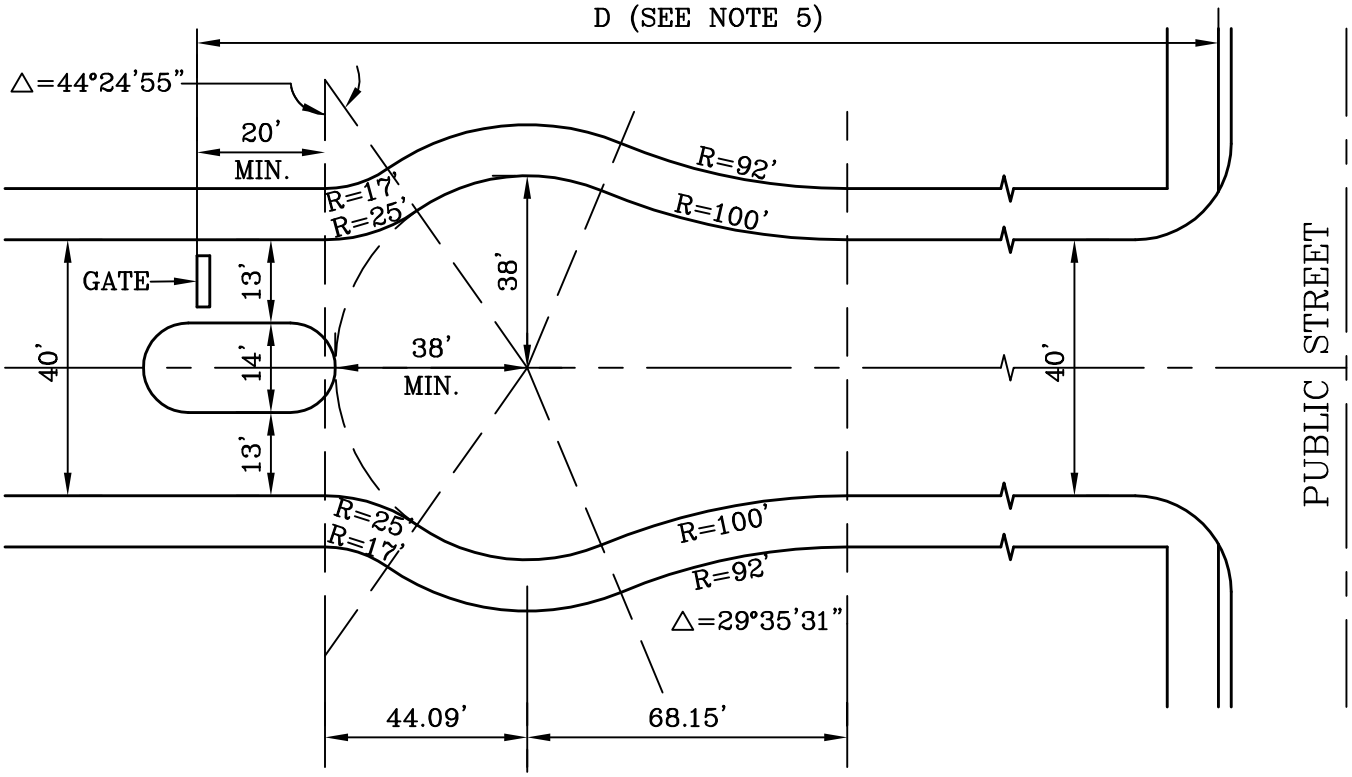

CITY OF MISSION VIEJO

PRIVATE STREETS

STANDARD PLAN NO.

304

APPROVED RCE 30190 DATE 9-23-03

SHT 3 OF 4

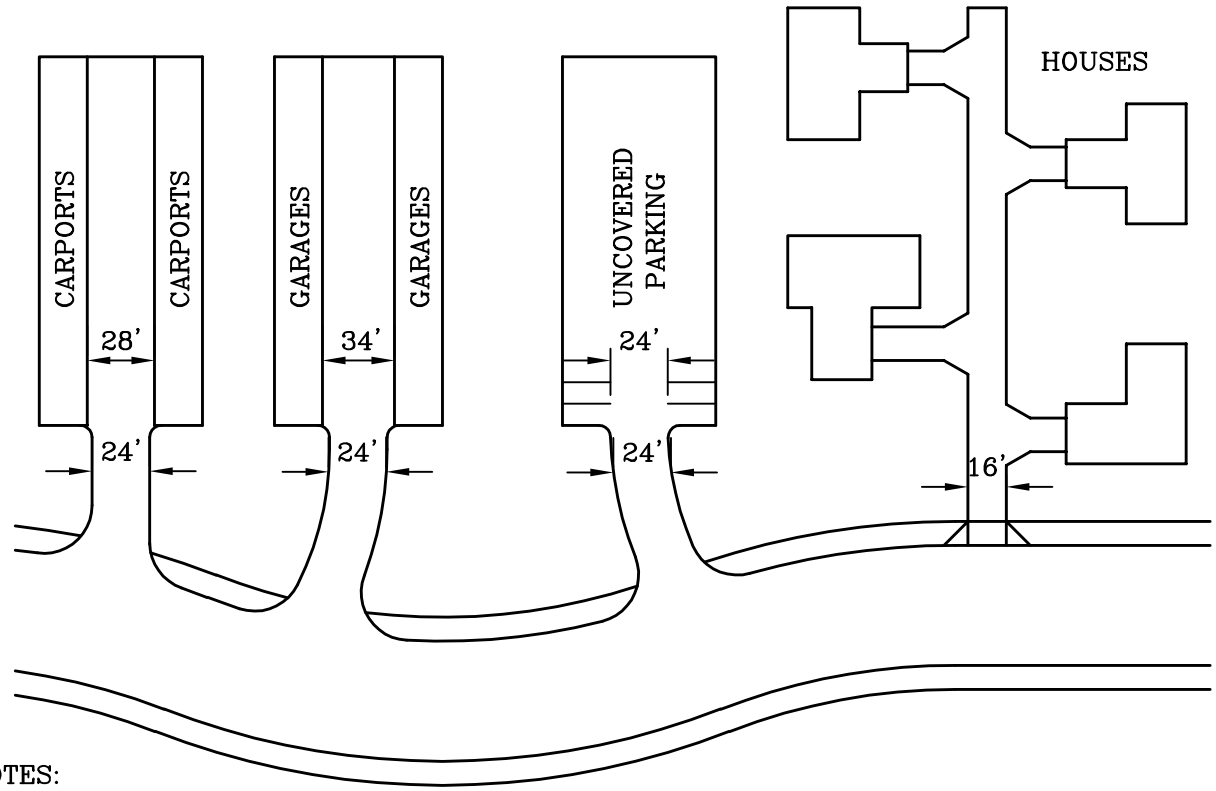

NOTES:

1. THE NUMBER AND SIZE OF PARKING SPACES PROVIDED FOR ANY DEVELOPMENT SHALL CONFORM WITH THE CITY OF MISSION VIEJO DEVELOPMENT CODE.

2. PARKING, OTHER THAN PARALLEL ON-STREET, SHALL BE PROVIDED WITHIN PARKING LOTS AND PARKING BAYS. DIAGONAL AND PERPENDICULAR PARKING ARE NOT ALLOWED IN STREETS UNLESS APPROVED BY THE CITY ENGINEER.

3. ACCESS DRIVES AND DRIVEWAYS SERVING PARKING LOTS SHALL PROVIDE A MINIMUM 24' TRAVEL WAY. MORE WIDTH SHALL BE REQUIRED IF PARALLEL PARKING IS PROPOSED ON THE DRIVEWAY.

4. AISLES BETWEEN ROWS OF BACK-OUT PERPENDICULAR PARKING SHALL PROVIDE A MINIMUM 24' TRAVEL WAY. AISLES BETWEEN ROWS OF COVERED BACK-OUT PARKING SHALL PROVIDE A MINIMUM 28'-WIDE TRAVEL WAY. AISLES BETWEEN ROWS OF GARAGES SHALL PROVIDE A MINIMUM 34' BETWEEN FACING GARAGES. IF ROLL UP DOORS ARE USED THE SPACING MAY BE REDUCED TO 30'.

5. JOINTLY-USED PRIVATE DRIVEWAYS SERVING FOUR (4) OF LESS RESIDENTIAL DWELLING UNITS SHALL BE PAVED TO A MINIMUM WIDTH OF 16'. IF MORE THAN FOUR (4) RESIDENTIAL UNITS ARE ULTIMATELY TO BE SERVED BY A PRIVATE DRIVEWAY AND NO OTHER ACCESS IS PROVIDED, THE DRIVEWAY SHALL BE PAVED WITH A MINIMUM WIDTH OF 24'.

6. MINIMUM PRIVATE DRIVEWAY GRADES SHALL BE 0.5%, REVERSE GRADE VERTICAL CURVES EXCEPTED.

CITY OF MISSION VIEJO

PARKING AISLES AND DRIVEWAYS

STANDARD PLAN NO.

304

9-23-03

APPROVED RCE 30190 DATE

SHT 4 OF 4

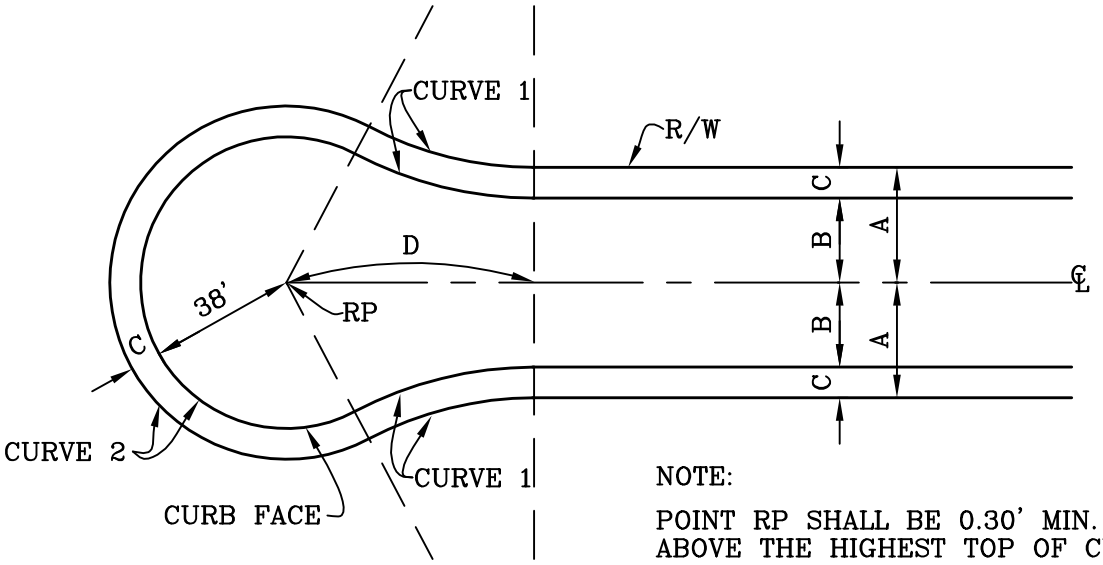

NOTE:

POINT RP SHALL BE 0.30' MIN. ABOVE THE HIGHEST TOP OF CURB ELEVATION WITHIN CUL-DE-SAC.

NOTE: (APPLIES TO ALL SHEETS)

MINIMUM STREET FLOW LINE GRADESHALL BE 0.5% MIN., REVERSE GRADE VERTICAL CURVES EXCEPTED.

CURVE 1											
R/W	A	B	C	D	△	CURB			PROPERTY LINE		
						R	L	T	R	L	T
80'	40'	32'	8'	40.25'	16°57'27"	100'	29.60'	14.91'	92'	27.23'	13.71'
60'	30'	22'	8'	64.50'	27°51'51"	100'	48.63'	24.81'	92'	44.74'	22.82'
56'	28'	20'	8'	68.15'	29°35'31"	100'	51.65'	26.41'	92'	47.52'	24.30'
52'	26'	18'	8'	71.55'	31°13'56"	100'	54.51'	27.95'	92'	50.15'	25.71'

CURVE 2									
R/W	A	B	C	D	△	CURB		PROPERTY LINE	
						R	L	R	L
80'	40'	32'	8'	40.25'	213°47'53"	38'	141.87'	46'	171.74'
60'	30'	22'	8'	64.50'	235°43'42"	38'	156.34'	46'	189.25'
56'	28'	20'	8'	68.15'	239°11'01"	38'	158.63'	46'	192.03'
52'	26'	18'	8'	71.55'	242°27'52"	38'	160.81'	46'	194.66'

CITY OF MISSION VIEJO

STANDARD CUL-DE-SAC (SYMMETRICAL PARKWAY)

STANDARD PLAN NO.

305

9-23-03

APPROVED RCE 30190 DATE

SHT 1 OF 4

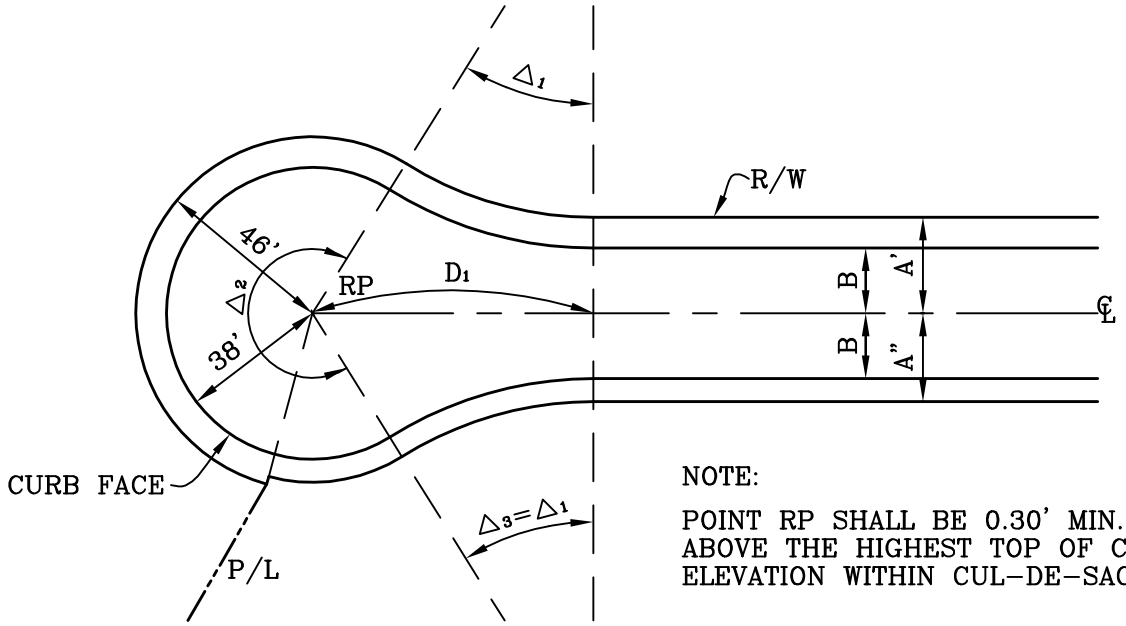

NOTE:

POINT RP SHALL BE 0.30' MIN. ABOVE THE HIGHEST TOP OF CURB ELEVATION WITHIN CUL-DE-SAC.

NOTE: REDUCTION IN PARKWAY WIDTH SHALL OCCUR AT THE PROPERTY LINE OF THE LAST LOT TAKING ACCESS FROM THE CUL-DE-SAC.

CURB CURVE DATA											
R/W	A'	A"	B	D_1	Δ_1	R_1	L_1	T_1	Δ_2	R_2	L_2
48'	25'	23'	17'	73.18'	32°01'26"	100'	55.89'	28.70'	244°02'53"	38'	161.86'
44'	23'	21'	15'	76.28'	33°33'26"	100'	58.57'	30.15'	247°06'53"	38'	163.89'
40'	22'	18'	14'	77.77'	34°18'04"	100'	59.87'	30.86'	248°36'08"	38'	164.88'

PROPERTY LINE CURVE DATA											
R/W	A'	A"	B	D_1	Δ_1	R_1	L_1	T_1	R_3	L_3	T_3
48'	25'	23'	17'	73.18'	32°01'26"	92'	51.42'	26.40'	94'	52.54'	26.98'
44'	23'	21'	15'	76.28'	33°33'26"	92'	53.88'	27.74'	94'	55.04'	28.34'
40'	22'	18'	14'	77.77'	34°18'04"	92'	55.08'	28.39'	96'	57.47'	29.63'

CITY OF MISSION VIEJO

STANDARD CUL-DE-SAC (UNSYMMETRICAL PARKWAY)

STANDARD PLAN NO.

305

9-23-03

APPROVED RCE 30190 DATE

SHT 2 OF 4

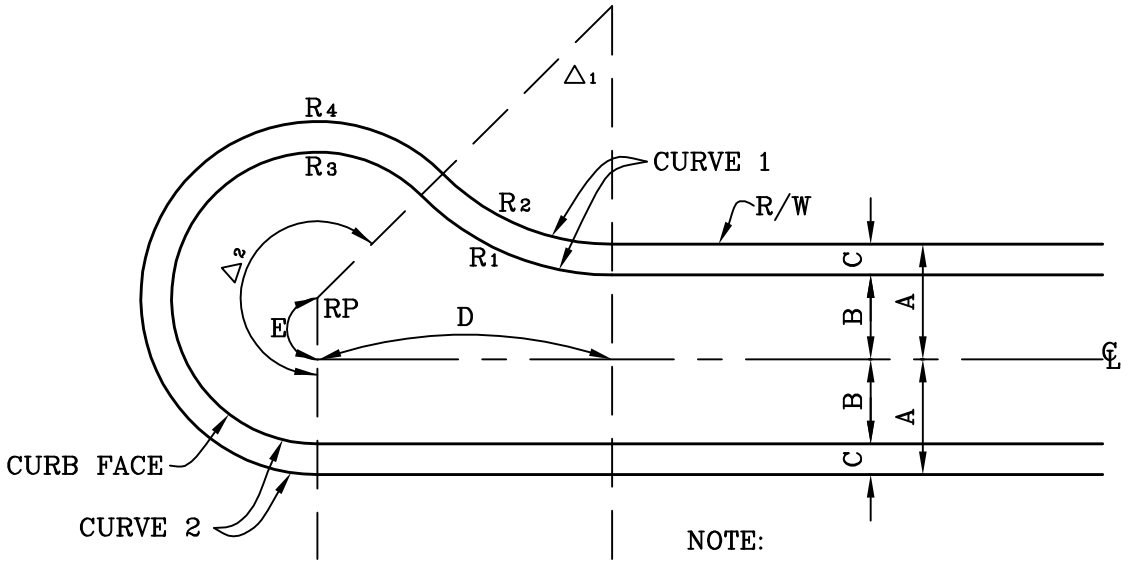

NOTE:

POINT RP SHALL BE 0.30' MIN. ABOVE THE HIGHEST TOP OF CURB ELEVATION WITHIN CUL-DE-SAC.

CURVE 1												
R/W	A	B	C	D	E	△1	CURB			PROPERTY LINE		
							R1	L	T	R2	L	T
80'	40'	32'	8'	49.48'	6'	27°15'58"	70'	33.31'	16.98'	62'	29.50'	15.04'
60'	30'	22'	8'	76.73'	16'	45°16'30"	70'	55.31'	29.19'	62'	48.99'	25.86'
56'	28'	20'	8'	80.50'	18'	48°11'23"	70'	58.87'	31.30'	62'	52.15'	27.73'
52'	26'	18'	8'	83.90'	20'	50°58'38"	70'	62.28'	33.37'	62'	55.16'	29.56'

CURVE 2										
R/W	A	B	C	D	E	△2	CURB		PROPERTY LINE	
							R3	L	R4	L
80'	40'	32'	8'	49.48'	6'	207°15'58"	38'	137.46'	46'	166.40'
60'	30'	22'	8'	76.73'	16'	225°16'30"	38'	149.41'	46'	180.86'
56'	28'	20'	8'	80.50'	18'	228°11'23"	38'	151.34'	46'	183.20'
52'	26'	18'	8'	83.90'	20'	230°58'38"	38'	153.19'	46'	185.44'

NOTES:
1. RADIAL POINT MAY BE OFFSET EITHER RIGHT OR LEFT OF CENTERLINE.
2. SEE SHEET 4 FOR UNSYMMETRICAL PARKWAY DETAILS.

CITY OF MISSION VIEJO

OFFSET CUL-DE-SAC (SYMMETRICAL PARKWAY)

STANDARD PLAN NO.

305

9-23-03

APPROVED RCE 30190 DATE

SHT 3 OF 4

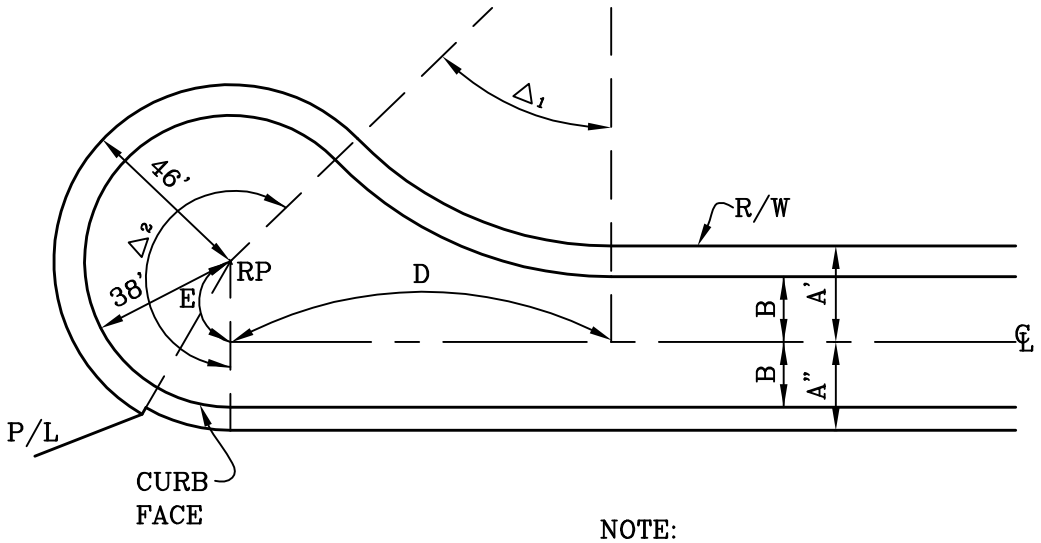

NOTE:

POINT RP SHALL BE 0.30' MIN. ABOVE THE HIGHEST TOP OF CURB ELEVATION WITHIN CUL-DE-SAC.

CURB CURVE DATA											
R/W	A'	A"	B	D	Δ_1	R_1	L_1	T_1	Δ_2	R_2	L_2
48'	25'	23'	17'	99.14'	45°55'15"	100'	80.15'	42.37'	225°55'15"	38'	149.84'
44'	23'	21'	15'	102.86'	48°11'23"	100'	84.11'	44.72'	228°11'23"	38'	151.34'
40'	22'	18'	14'	104.61'	49°71'39"	100'	86.03'	45.88'	229°17'39"	38'	152.07'

PROPERTY LINE CURVE DATA									
R/W	A'	A"	B	D	E	Δ_1	R_1	L_1	T_1
48'	25'	23'	17'	99.14'	21'	45°55'15"	92'	73.74'	38.98'
44'	23'	21'	15'	102.86'	23'	48°11'23"	92'	77.38'	41.14'
40'	22'	18'	14'	104.61'	24'	49°71'39"	92'	79.15'	42.21'

NOTE: REDUCTION OF PARKWAY WIDTH SHALL OCCUR AT THE PROPERTY LINE OF THE LAST LOT TAKING ACCESS FROM THE CUL-DE-SAC.

CITY OF MISSION VIEJO

OFFSET CUL-DE-SAC (UNSYMMETRICAL PARKWAY)

STANDARD PLAN NO.

305

9-23-03

APPROVED RCE 30190 DATE

SHT 4 OF 4

PLAN

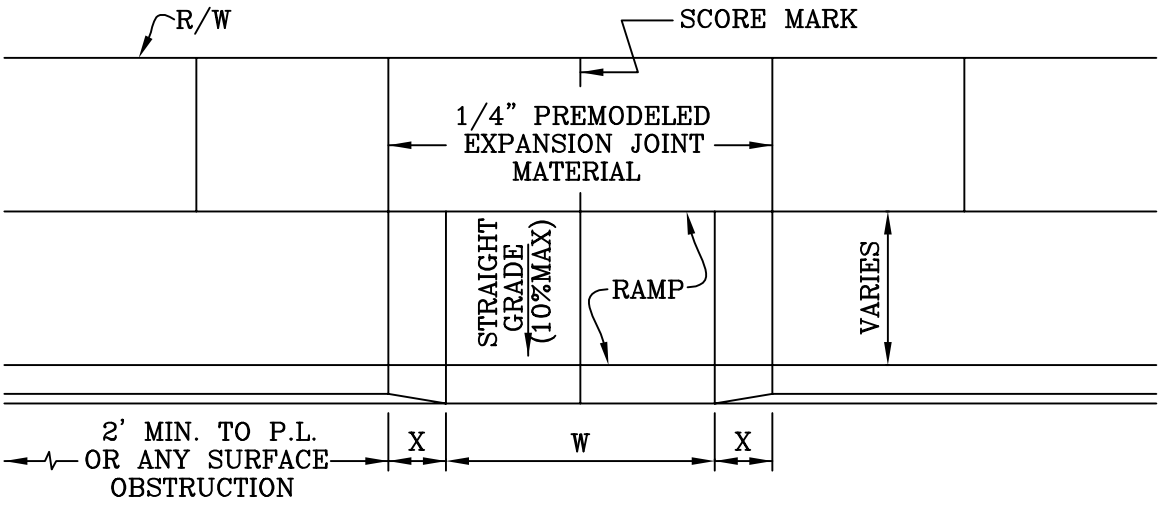

ELEVATION

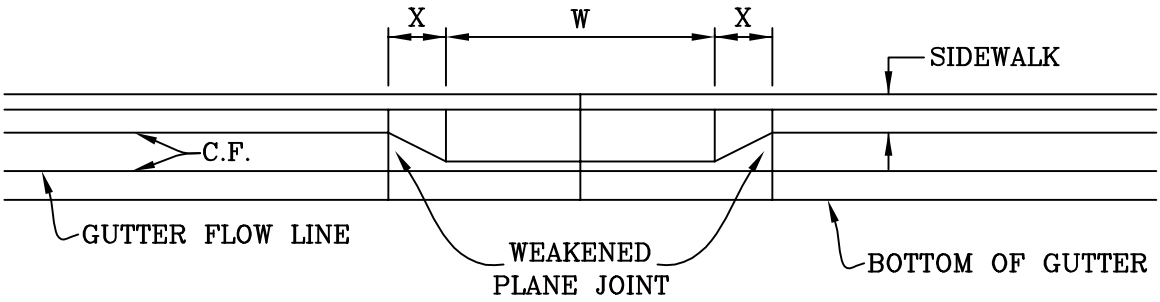

VALUES OF "W"	MIN.
RESIDENTIAL	12'
* COMM. & IND. ONE-WAY TWO-WAY	 14' 28'

* USE OF STANDARD PLAN 306 IN COMMERCIAL AND INDUSTRIAL AREAS REQUIRES APPROVAL OF THE CITY ENGINEER.

CITY OF MISSION VIEJO

DRIVEWAY APPROACH

306

Rich Schlesinger 08/01/05

APPROVED BY: CITY ENGINEER RCE 51160 DATE

SHT 1 OF 2

CROSS SECTION

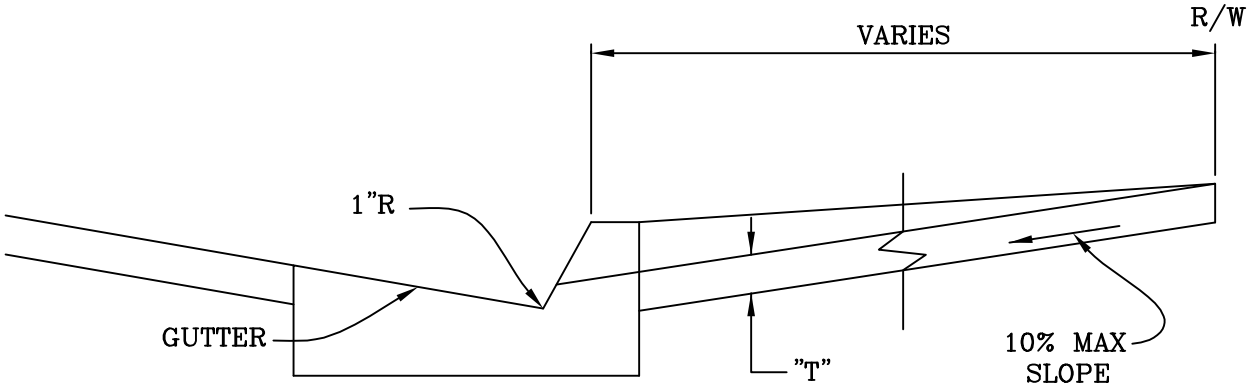

NOTES:

1. UNDER NO CIRCUMSTANCES WILL SAW CUTTING IN THE GUTTER FLOW LINE BE ALLOWED TO REMOVE CURB.
2. COMMERCIAL, INDUSTRIAL, AND RESIDENTIAL DRIVEWAYS SERVING 5 OR MORE DWELLING UNITS SHALL HAVE 6" OF BASE MATERIAL UNDER GUTTER, CURB RAMP AND SIDEWALK FROM TOP OF "X" TO TOP OF "X".
3. GUTTER, RAMP, AND SIDEWALK THICKNESS "T" SHALL BE 6" (RESIDENTIAL) OR 8" (COMMERCIAL / INDUSTRIAL) FROM TOP OF "X" TO TOP OF "X".
4. WEAKENED PLANE JOINTS SHALL BE 1 1/2" DEEP WITH 1/8" RADIUS EDGES.
5. COMMERCIAL AND INDUSTRIAL DRIVEWAY APPROACHES SHALL USE STANDARD No. 307 UNLESS THE CITY ENGINEER APPROVES THE USE OF STANDARD PLAN 306.
6. DRIVEWAY APRON SHALL BE PORTLAND CEMENT CONCRETE.
7. "X" SHALL BE 3' FOR 6" CURB, 4' FOR 8" CURB.
8. DRIVEWAYS WITH "W" LESS THAN 20' SHALL HAVE ONE (1) SCORE MARK AT 1/2 "W". DRIVEWAYS WITH "W" OVER 20' SHALL HAVE SCORE MARKS NOT TO EXCEED 10' ON CENTER.
9. FOR NEW DRIVEWAY CONSTRUCTION ON EXISTING STREETS, 12" OF ASPHALT FROM THE EDGE OF THE GUTTER SHALL BE SAWCUT AND REMOVED.

CITY OF MISSION VIEJO

MISSION VIEJO CALIFORNIA	DRIVEWAY APPROACH	306
	Rich Schlesinger 08/01/05 APPROVED BY: CITY ENGINEER RCE 51160 DATE	SHT 2 OF 2

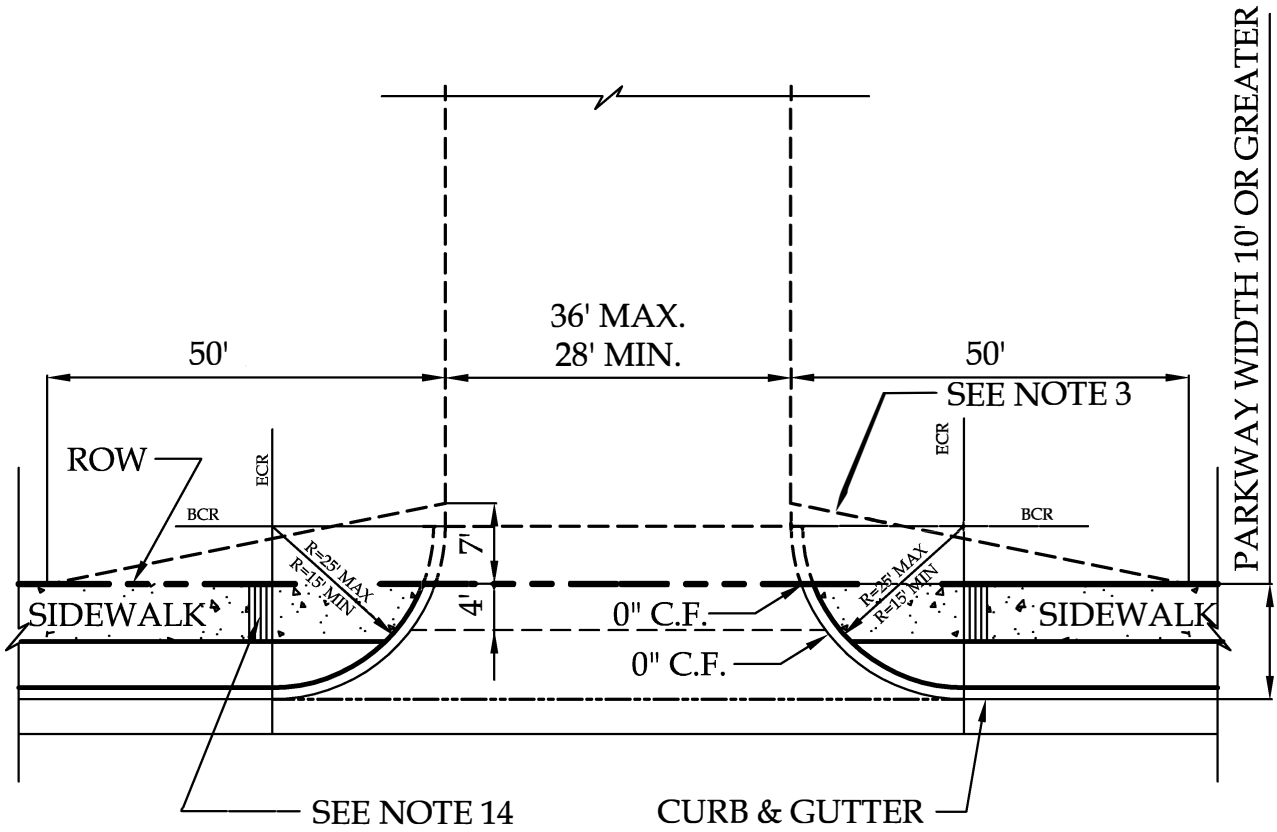

CASE 1 PLAN

N.T.S.

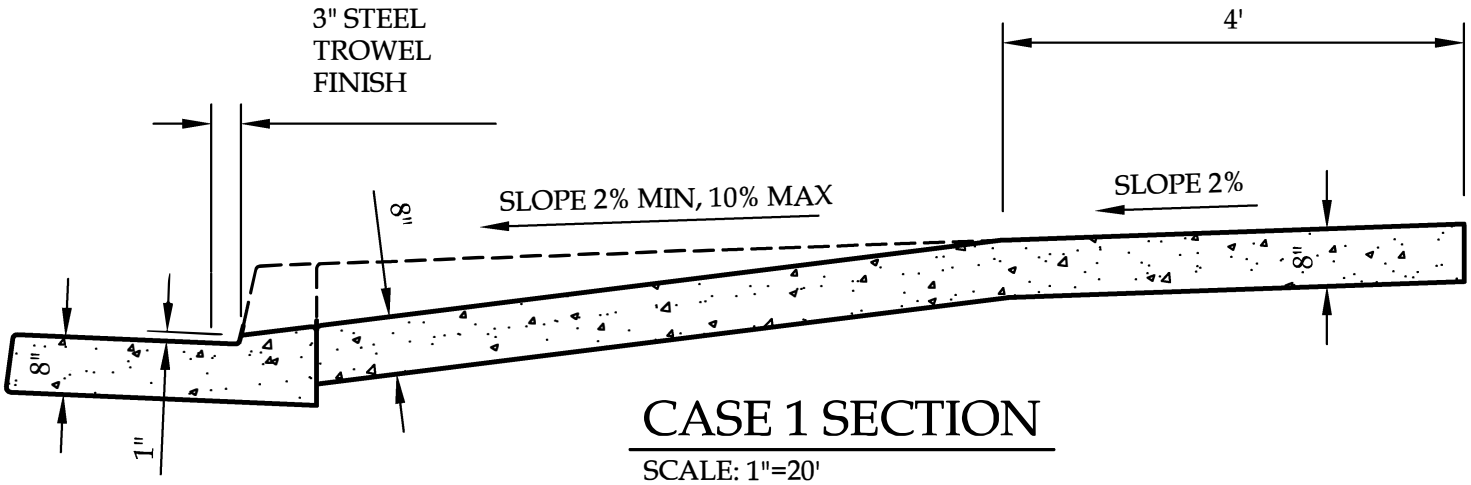

CASE 1 SECTION

SCALE: 1"=20'

CITY OF MISSION VIEJO

ARTERIAL HIGHWAY AND
COMMERCIAL DRIVEWAY APPROACH

307

Rich Schlesinger 08/01/05

APPROVED BY: CITY ENGINEER RCE 51160 DATE

SHT 1 OF 3

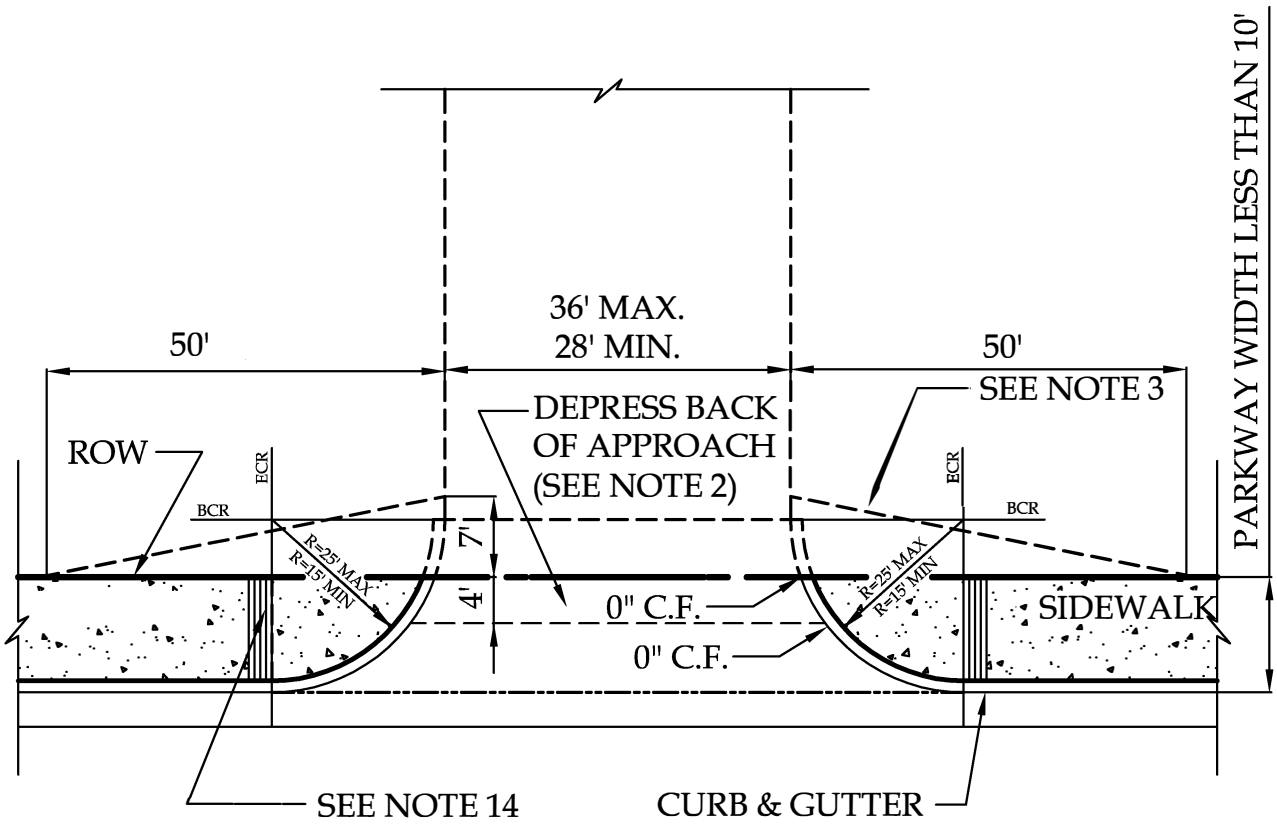

CASE 2 PLAN

N.T.S.

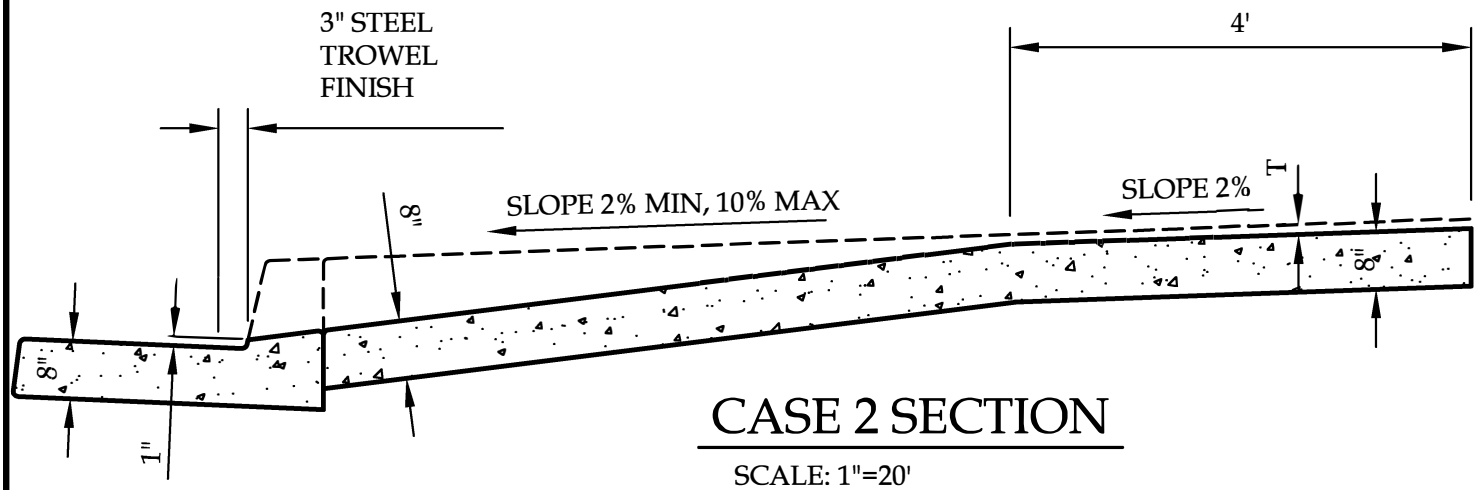

CASE 2 SECTION

SCALE: 1"=20'

CITY OF MISSION VIEJO

ARTERIAL HIGHWAY AND
COMMERCIAL DRIVEWAY APPROACH

307

Rich Schlesinger 08/01/05

APPROVED BY: CITY ENGINEER RCE 51160 DATE

SHT 2 OF 3

NOTES:

1. "R" LESS THAN 25' WILL REQUIRE APPROVAL OF THE CITY ENGINEER.

2. FOR PARKWAY WIDTH LESS THAN 10' BUT GREATER THAN OR EQUAL TO 9' (T) = 1". FOR PARKWAY WIDTH LESS THAN 9' BUT GREATER THAN OR EQUAL TO 8' (T) = 2". FOR PARKWAY WIDTH LESS THAN 8' SPECIAL DESIGN AND APPROVAL BY CITY ENGINEER IS REQUIRED.

3. SIGHT DISTANCE AREA TO BE CLEAR OF ANY VISUAL OBSTRUCTION ABOVE 12" HEIGHT.

4. WEAKENED-PLAN JOINTS SHALL BE INSTALLED AT BOTH SIDES OF THE DRIVEWAY AND AT APPROXIMATELY 10' INTERVALS, AND AT THE R/W.

5. CONCRETE SHALL BE CLASS 520-C-2500 WITH MAXIMUM SLUMP OF 4".

6. UNDER NO CIRCUMSTANCES WILL SAW CUTTING IN THE GUTTER FLOW LINE TO REMOVE THE CURB BE ALLOWED.

7. 6 INCHES OF BASE MATERIAL IS REQUIRED UNDER ALL CONCRETE.

8. WEAKENED PLANE JOINTS SHALL BE 1 $\frac{1}{2}$ INCHES DEEP WITH $\frac{1}{8}$ INCH RADIUS EDGES.

9. FOR NEW DRIVEWAY CONSTRUCTION ON EXISTING ROADWAYS, 12 INCHES OF ASPHALT FROM THE EDGE OF THE GUTTER SHALL BE REMOVED.

10. ACCESS RAMPS SHALL COMPLY WITH TITLE 24 AND ADA REQUIREMENTS.

11. CURB & GUTTER AND RAMP/APPROACH SHALL NOT BE MONOLITHIC.

12. IF SIDEWALK IS LOCATED OUTSIDE OF THE PUBLIC RIGHT OF WAY A SIDEWALK EASEMENT SHALL BE DEDICATED TO THE CITY OF MISSION VIEJO.

13. RADIUS OF CURB RETURNS SHALL BE SYMMETRICAL.

14. INSTALL BORDER PER STANDARD PLAN 322.

15. EXPANSION JOINT SHALL BE INSTALLED AT PUBLIC ROW LINE (IF NECESSARY).

CITY OF MISSION VIEJO

ARTERIAL HIGHWAY AND
COMMERCIAL DRIVEWAY APPROACH

307

Rich Schlesinger 08/01/05

APPROVED BY: CITY ENGINEER RCE 51160 DATE

SHT 3 OF 3

CURVE DATA
CURB RADIUS = 50'
P_L = 50' − P_S

CURVE DATA
PROPERTY LINE
R = W + 10'
$D_3 = D_1 + D_{2S} + D_{2L}$

CURB LINE
$R = W_L + 10' - P_L$
$D_3 = D_1 + D_{2S} + D_{2L}$

$R = W_L + 10' - P_L$

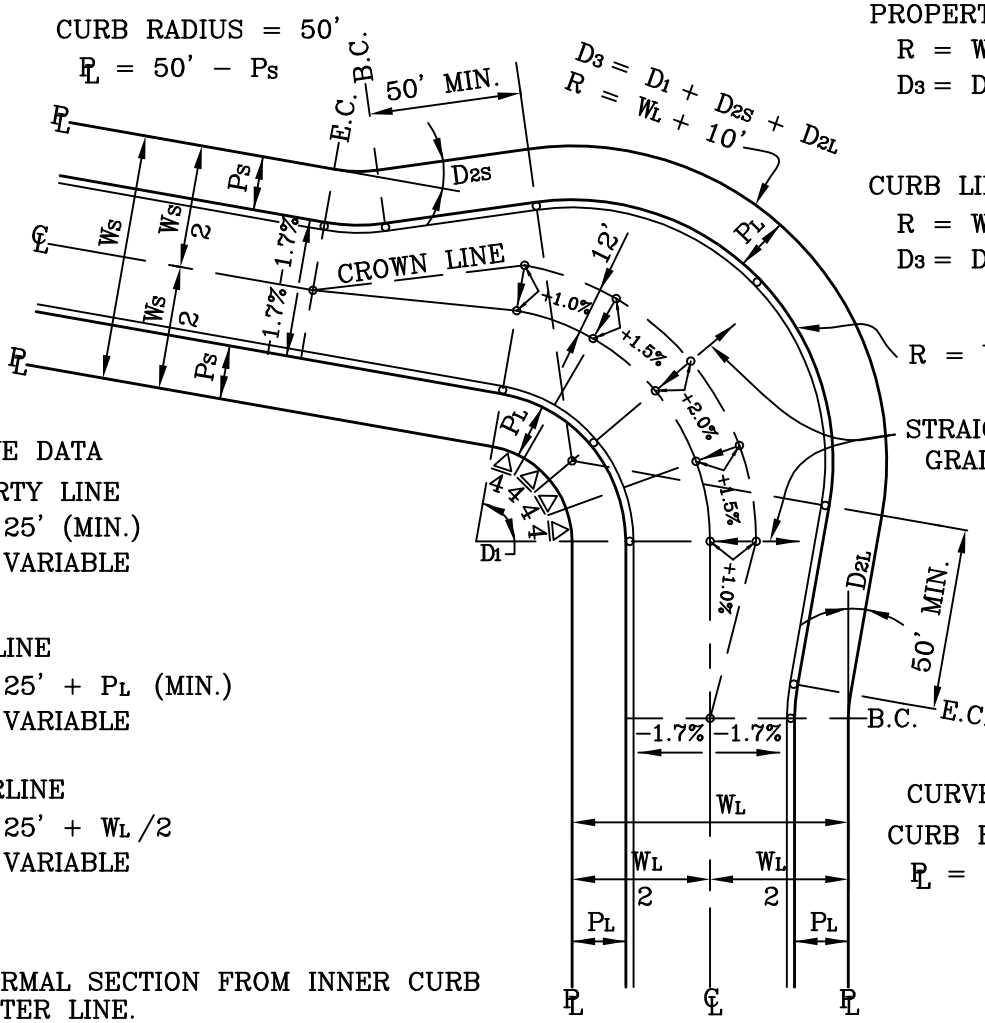

CURVE DATA
PROPERTY LINE
R_1 = 25' (MIN.)
D_1 = VARIABLE

CURB LINE
$R_1 = 25' + P_L$ (MIN.)
D_1 = VARIABLE

CENTERLINE
$R = 25' + W_L/2$
D = VARIABLE

CURVE DATA
CURB RADIUS = 50'
P_L = 50' − P_S

NOTES:

1. USE NORMAL SECTION FROM INNER CURB TO CENTER LINE.
2. FROM CROWN LINE TO OUTER CURB, THE MAX. SLOPE IS 1" PER FOOT. (8.33%).
3. SUBSCRIPTS "S" AND "L" DENOTE SMALLER AND LARGER STREETS RESPECTIVELY.
4. SUPERELEVATION PERCENTAGES SHOWN ARE A STRAIGHT GRADE FROM CENTERLINE TO CROWN LINE.
5. ELEVATIONS REQUIRED ON PLAN WHERE CIRCLED (∘).
6. WHEN STREETS HAVE TILT − TYPE SECTIONS, THE CROWN LINE WILL NOT NECESSARILY TERMINATE IN CENTER LINE AT ANGLE POINT OF CURB.
7. MINIMUM STREET FLOW LINE GRADE SHALL BE 0.5% MINIMUM, REVERSE GRADE VERTICAL CURVES EXCEPTED.

CITY OF MISSION VIEJO

STANDARD KNUCKLE

STANDARD PLAN NO.
309

APPROVED — RCE 30190 — DATE 9-23-03

SHT 1 OF 1

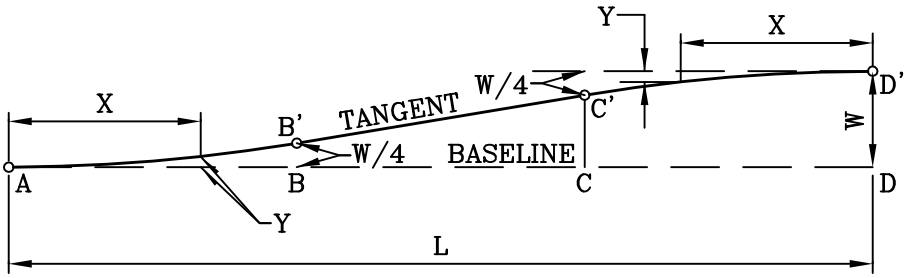

W = WIDTH OF LEFT TURN POCKET
L = LENGHT OF TAPER
X = DISTANCE FROM POINT "A" ALONG BASELINE
Y = OFFSET FROM BASELINE
AB = BC = CD = L/3
AB' AND C'D' ARE PARABOLIC CURVES EXCEPT ON CURVED ALIGNMENTS

SINGLE LEFT TURN POCKET

L=90' W=10'

X	0'	10'	20'	30'	40'	50'	60'	70'	80'	90'
Y	0.00'	0.28'	1.11'	2.50'	4.17'	5.83'	7.50'	8.89'	9.72'	10.00'

DOUBLE LEFT TURN POCKET

L=150' W=20'

X	0'	10'	20'	30'	40'	50'	60'	70'
Y	0.00'	0.20'	0.80'	1.80'	3.20'	5.00'	7.00'	9.00'

80'	90'	100'	110'	120'	130'	140'	150'
11.00'	13.00'	15.00'	16.80'	18.20'	19.20'	19.80'	20.00'

NOTE:

IN THE CASE WHEN THE BASELINE IS CURVED, THE OFFSETS ARE CALCULATED BY ASSUMING THE BASELINE TO BE A TANGENT, THEN THEY ARE APPLIED TO THE CURVED BASELINE. AB' AND C'D' ARE NO LONGER PARABOLIC AND B'C' IS NO LONGER TANGENT.

CITY OF MISSION VIEJO

PARABOLIC CURB TRANSITION

STANDARD PLAN NO.

310

9-23-03

APPROVED RCE 30190 DATE

SHT 1 OF 1

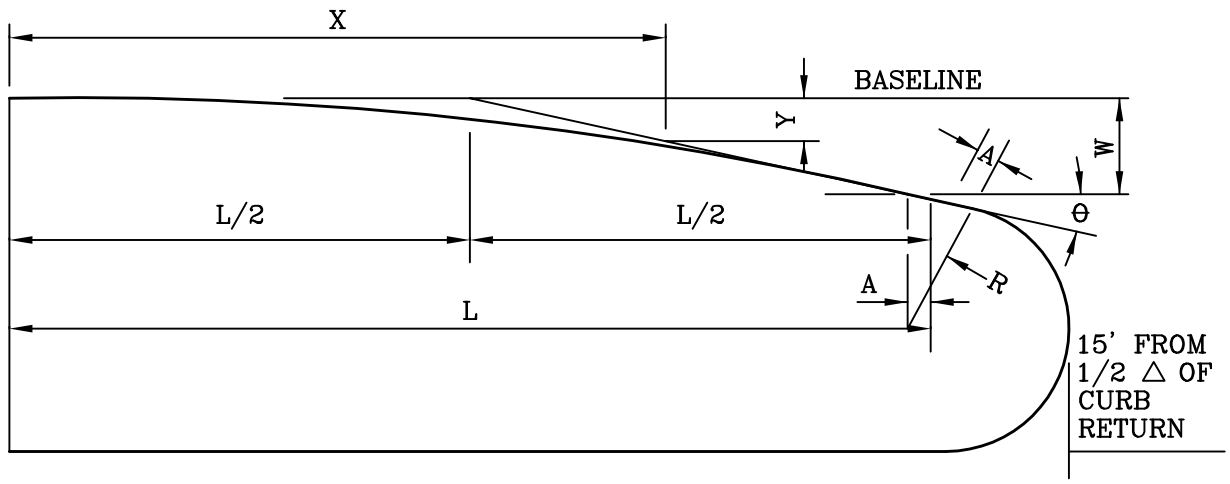

$Y = W(X^2/L)$ $\quad$ $\tan\theta = 2W/L$ $\quad$ $A = R(\tan\phi/2)$

L = LENGTH OF FLARE IN FEET
W = MAXIMUM OFFSET DISTANCE IN FEET
X = DISTANCE ALONG BASE LINE IN FEET
A = TANGENT
R = RADIUS OF NOSE IN FEET
Y = OFFSET FROM BASE LINE IN FEET

OFFSET "Y" (IN FEET)
FOR W/L = 1:10

L \ X	10	20	30	40	50	60	70	80	90	100
60	.17	.67	1.50	2.67	4.17	6.00	---	---	---	---
100	.10	.40	.90	1.60	2.50	3.60	4.90	6.40	8.10	10.00

NOTES:

1. FOR 60' FLARE, USE R=4' (14' MEDIAN)
   FOR 100' FLARE, USE R=7' (24' MEDIAN)
2. IF STATION OF RADIUS POINT IS NOT GIVEN ON PLAN, TANGENT "A" MAY BE IGNORED.

CITY OF MISSION VIEJO

PARABOLIC MEDIAN CURB FLARE

STANDARD PLAN NO.
311

9-23-03

APPROVED RCE 30190 DATE

SHT 1 OF 1

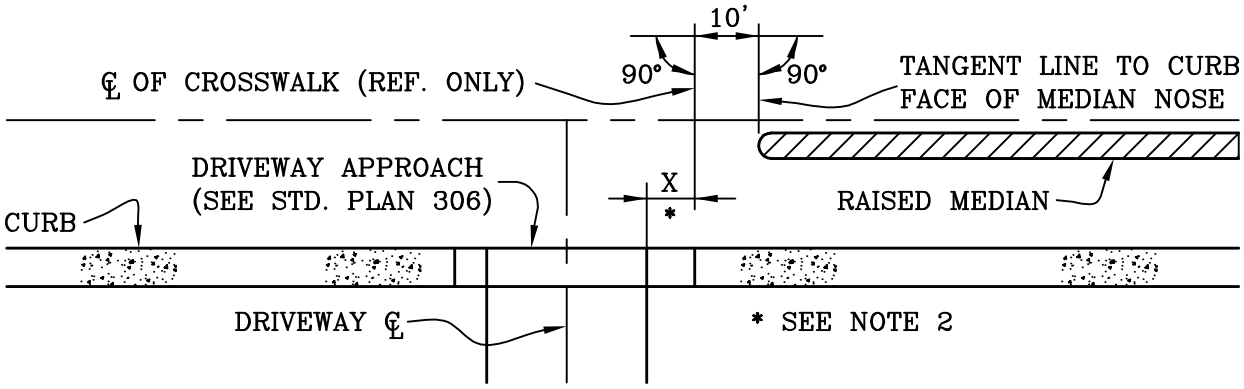

RIGHT ANGLE INTERSECTION (DRIVEWAY)

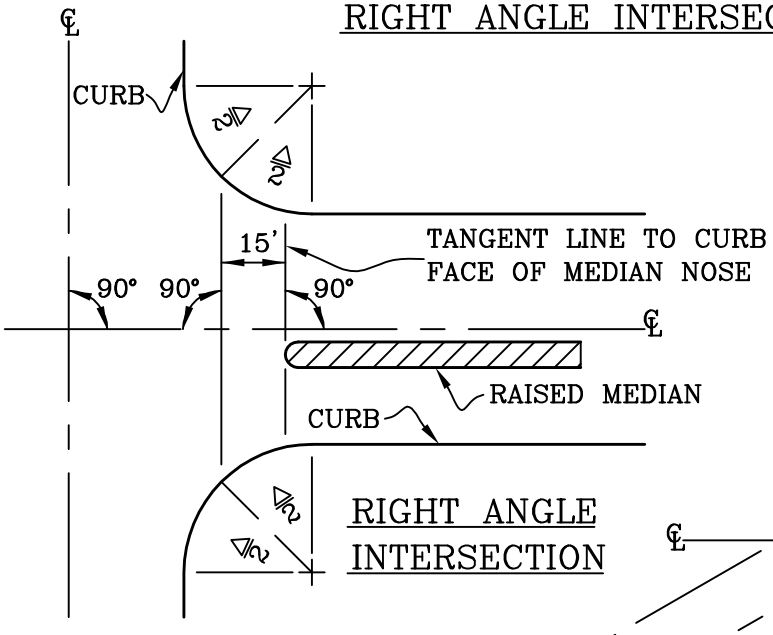

RIGHT ANGLE INTERSECTION

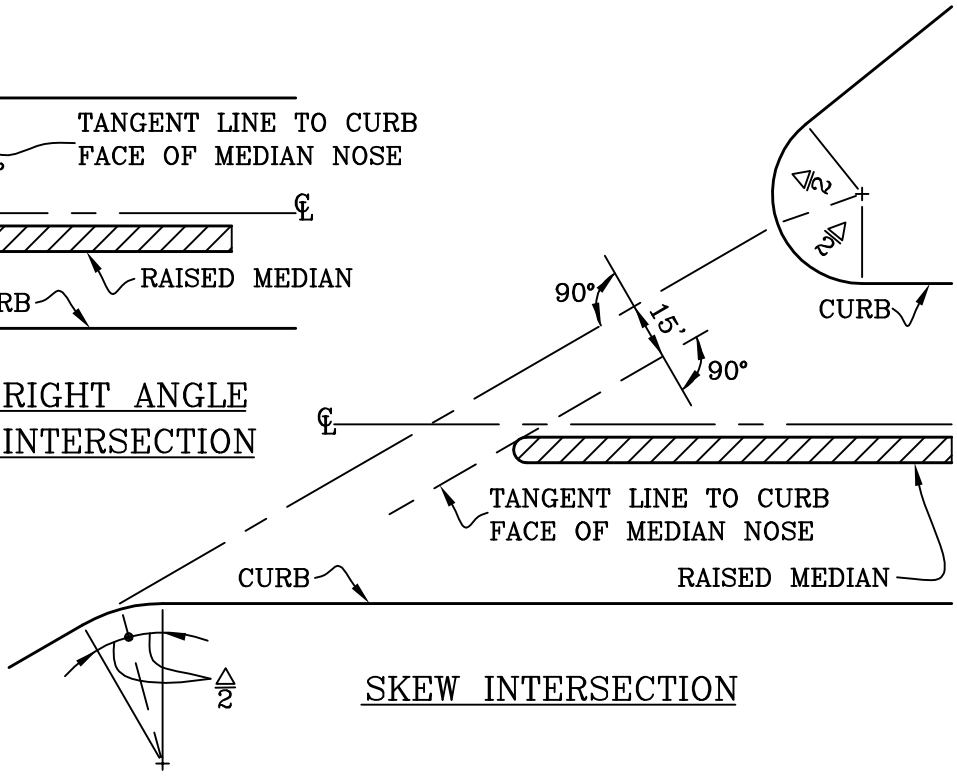

SKEW INTERSECTION

NOTES:

1. EXTEND DOUBLE YELLOW STRIPING FROM MEDIAN NOSE TO CROSSWALK OR TO △/2 IF THERE IS NO CROSSWALK.

2. FOR "X" DISTANCE SEE STD. PLAN 306.

CITY OF MISSION VIEJO

MISSION VIEJO CALIFORNIA	RAISED MEDIAN NOSE LOCATION	STANDARD PLAN NO. 312
	Robert Henderson 9-23-03 APPROVED RCE 30190 DATE	SHT 1 OF 1

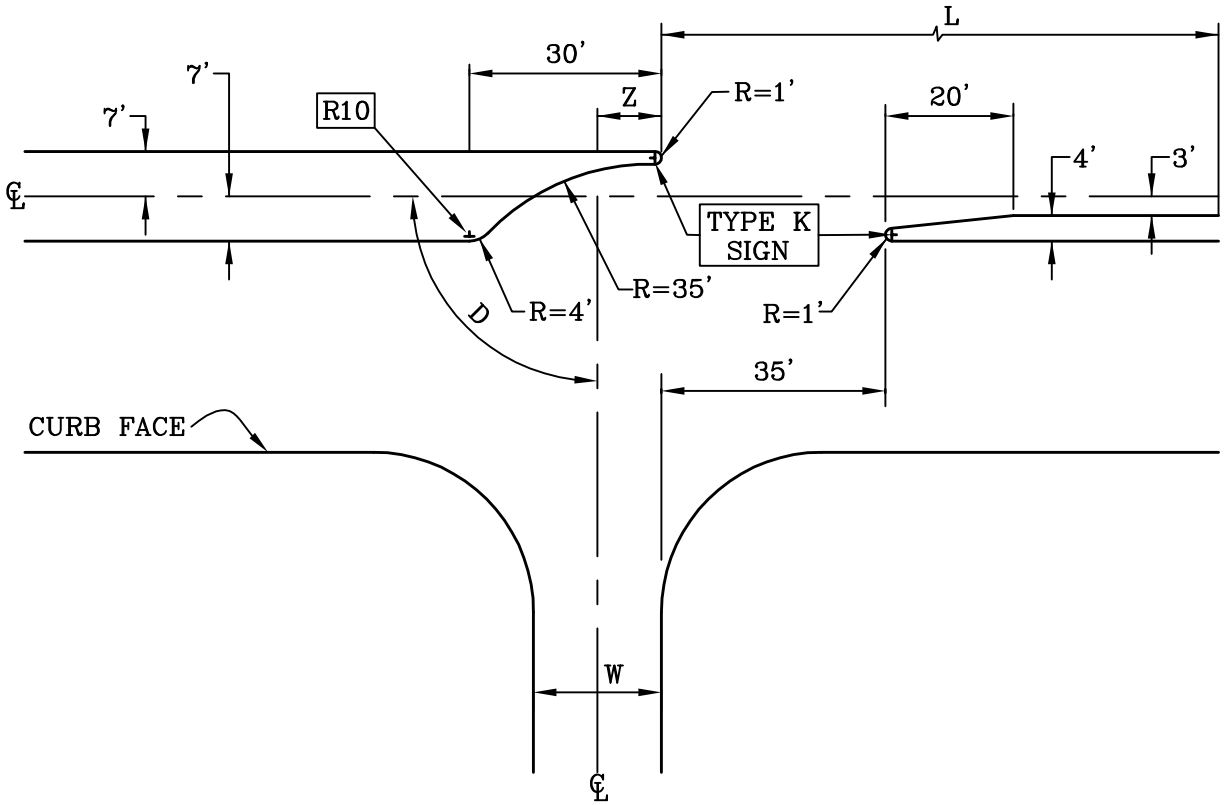

NOTES:

Z = W/2

W = INTERSECTING STREET OR DRIVEWAY WIDTH (CURB TO CURB)

D = ANGLE OF INTERSECTION

L = POCKET LENGTH AS SHOWN PER PLANS

R = CURB RETURN RADIUS

⊢ = TRAFFIC SIGN INSTALLED ON RAISED MEDIAN

CITY OF MISSION VIEJO

LEFT-TURN-IN-ONLY MEDIAN OPENING

STANDARD PLAN NO.

313

9-23-03

APPROVED RCE 30190 DATE

SHT 1 OF 1

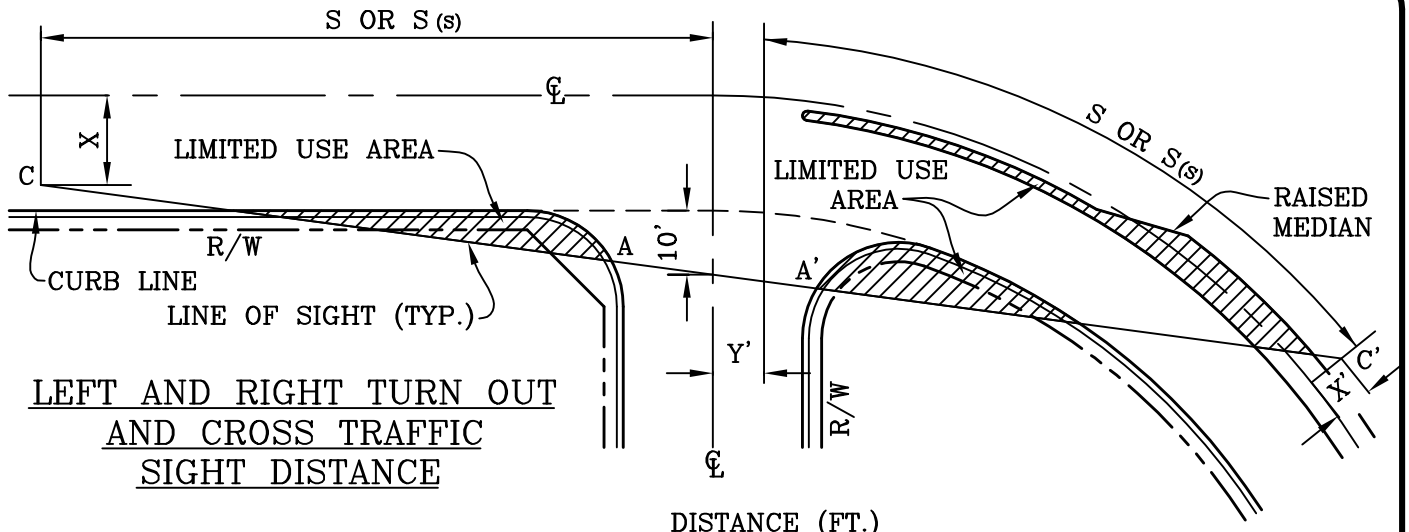

LEFT AND RIGHT TURN OUT AND CROSS TRAFFIC SIGHT DISTANCE

DISTANCE (FT.)

	S **	S(s) **	Y'	X*	X'*
MAJOR	660	580	37	37	13
PRIMARY	610	500	25	25	13
SECONDARY	550	430	18	18	6
COMMUTER	500	360	0	0	0
COLLECTOR	390	250	0	0	0
LOCAL	280	150	0	0	0

*X AND X' ARE BASED UPON A STANDARD 14' MEDIAN FOR MAJOR AND PRIMARY HIGHWAYS

**NOTE ADJUSTMENTS PER NOTE 2

USE S VALUES FOR UNSIGNALIZED INTERSECTIONS
USE S(s) VALUES FOR SIGNALIZED INTERSECTIONS

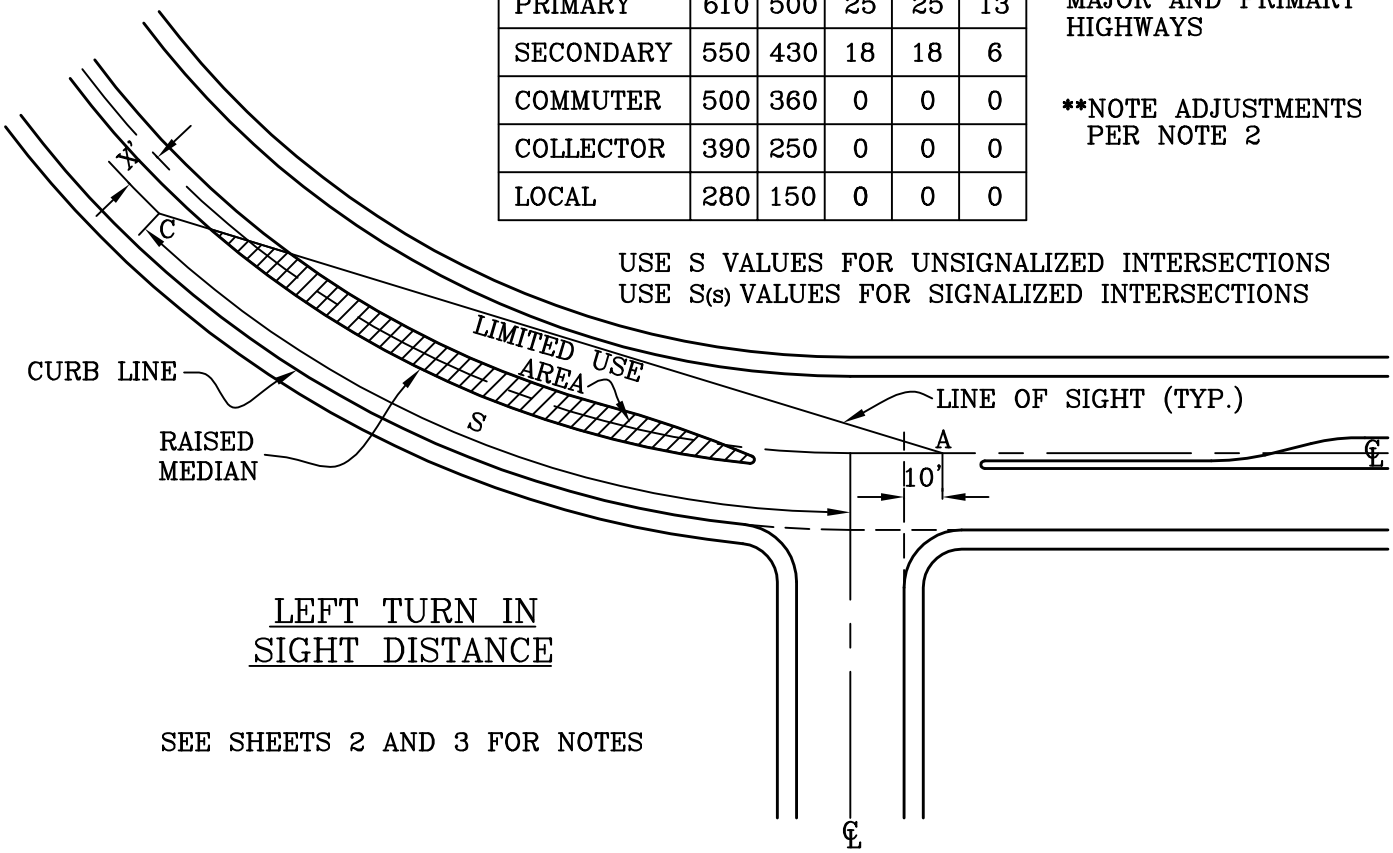

LEFT TURN IN SIGHT DISTANCE

SEE SHEETS 2 AND 3 FOR NOTES

CITY OF MISSION VIEJO

INTERSECTION SIGHT DISTANCE

STANDARD PLAN NO.

315

APPROVED RCE 30190 DATE 9-23-03

SHT 1 OF 3

NOTES:

1. THE DISTANCE S REPRESENTS THE CORNER SIGHT DISTANCE MEASURED ALONG THE CENTERLINE OF THE ROAD. THE CORNER SIGHT DISTANCE IS THE DISTANCE REQUIRED TO ALLOW 7 1/2 SECONDS FOR THE DRIVER ON THE CROSS ROAD (OR LEFT TURN POCKET) TO SAFELY CROSS THE MAIN ROADWAY OR TURN LEFT WHILE THE APPROACH VEHICLE TRAVELS AT THE ASSUMED DESIGN SPEED OF THE MAIN ROADWAY.

2. THE DISTANCE S SHOULD BE INCREASED BY 20% FROM THE AMOUNT SHOWN ON THE TABLE ON SUSTAINED DOWNGRADES STEEPER THAN 3% AND LONGER THAN ONE MILE.

3. POINTS A AND A' ARE THE LOCATIONS OF A DRIVERS LINE OF SIGHT (3.5 FOOT EYE HEIGHT) TO ONCOMING VEHICLES (4.25 FOOT OBJECT HEIGHT) LOCATED AT POINTS C AND C' WHILE IN A VEHICLE AT AN INTERSECTION 10 FEET BACK FROM THE PROJECTION OF THE CURB LINE. IN NO CASE SHALL POINTS A OR A' BE LESS THAN 15 FEET FROM THE EDGE OF THE TRAVELED WAY.

4. THE DISTANCE Y' IS THE DISTANCE MEASURED FROM THE CENTERLINE OF THE MAIN ROAD TO THE FAR RIGHT THROUGH TRAVEL LANE. THE DISTANCE Y' IS EQUAL TO ZERO FOR T-INTERSECTIONS. THE DISTANCE X IS THE CENTER OF THE FAR RIGHT THROUGH TRAVEL LANE. THE DISTANCE X' IS THE DISTANCE MEASURED FROM THE CENTERLINE OF THE MAIN ROAD TO THE CENTER OF THE TRAVEL LANE NEAREST THE CENTERLINE OF THE ROAD.

5. THE LIMITED USE AREA IS DETERMINED BY THE GEOGRAPHICAL METHOD USING THE APPROPRIATE DISTANCES GIVEN IN THE IN THE TABLE. IT SHALL BE USED FOR THE PURPOSE OF PROHIBITING OR CLEARING OBSTRUCTIONS IN ORDER TO MAINTAIN ADEQUATE SIGHT DISTANCE AT INTERSECTIONS.

6. THE LINE OF SIGHT LINE SHALL BE SHOWN AT INTERSECTIONS ON ALL LANDSCAPING PLANS, GRADING PLANS AND TENTATIVE TRACT PLANS WHERE SAFE SIGHT DISTANCE IS QUESTIONABLE. IN CASES WHERE AN INTERSECTION IS LOCATED ON A VERTICAL CURVE, A PROFILE OF THE LINE OF SIGHT MAY BE REQUIRED.

7. OBSTRUCTIONS SUCH AS BUS SHELTERS, WALLS OR LANDSCAPING WITHIN THE LIMITED USE AREA WHICH COULD RESTRICT THE LINE OF SIGHT SHALL NOT BE PERMITTED.
   a. PLANTS AND SHRUBS WITHIN THE LIMITED USE AREA SHALL BE OF THE TYPE THAT WILL GROW NO HIGHER THAN 12 INCHES ABOVE THE GROUND AND SHALL BE MAINTAINED AT A MAXIMUM HEIGHT OF 12 INCHES ABOVE THE GROUND. MAINTENANCE AT A LOWER HEIGHT MAY BE REQUIRED ON CREST VERTICAL CURVES PER NOTE 6 ABOVE.

   b. A PROFILE OF THE LINE OF SIGHT MAY BE REQUIRED TO VERIFY 12" MINIMUM VERTICAL CLEARANCE ABOVE VARIABLE HEIGHT OBSTRUCTIONS SUCH AS SLOPE LANDSCAPING, PLANTS AND SHRUBS.

CITY OF MISSION VIEJO

MISSION VIEJO CALIFORNIA 1988

INTERSECTION SIGHT DISTANCE

STANDARD PLAN NO. 315

Kevin Henderson 9-23-03

APPROVED RCE 30190 DATE

SHT 2 OF 3

NOTES CONTINUED:

c. THE TOE OF THE SLOPE MAY ENCROACH INTO THE LIMITED USE AREA PROVIDED THAT THE REQUIREMENTS OF (b) ABOVE ARE SATISFIED.

d. IN LIEU OF PROVIDING A PROFILE OF THE LINE OF SIGHT, THE TOE OF SLOPE SHALL NOT ENCROACH INTO THE LIMITED USE AREA, AND THE LIMITED USE AREA SHALL SLOPE AT 2% MAXIMUM TO THE ROADWAY.

8. TREES SHALL NOT BE PERMITED WITHIN ANY PORTION OF THE LIMITED USE AREA.

9. RESIDENTIAL DRIVEWAYS SERVING FOUR OR MORE UNITS AND COMMERCIAL DRIVEWAYS SHALL BE TREATED AS A LOCAL STREET INTERSECTION.

CITY OF MISSION VIEJO

INTERSECTION SIGHT DISTANCE

STANDARD PLAN NO.

315

9-23-03

APPROVED RCE 30190 DATE

SHT 3 OF 3

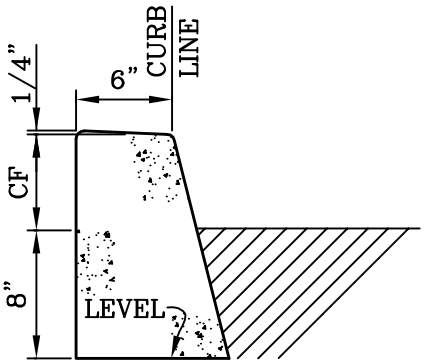

TYPE B–6 AND B–8

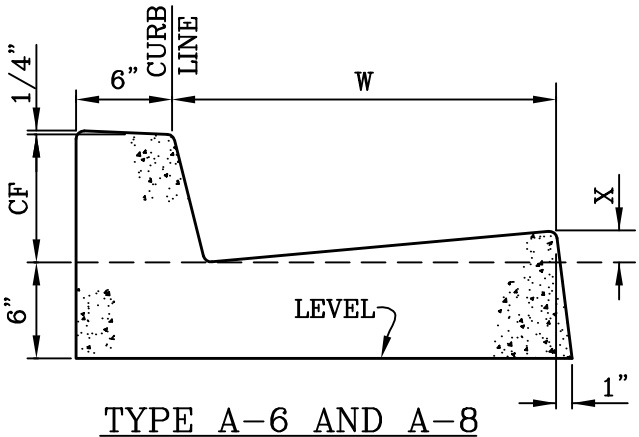

TYPE A–6 AND A–8

W=18" X=1 1/2" FOR 6" CF

W=24" X=2" FOR 8" CF

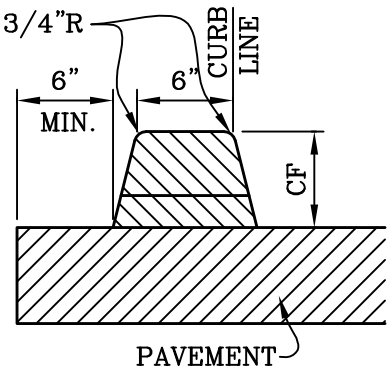

TYPE E–6 AND E–8

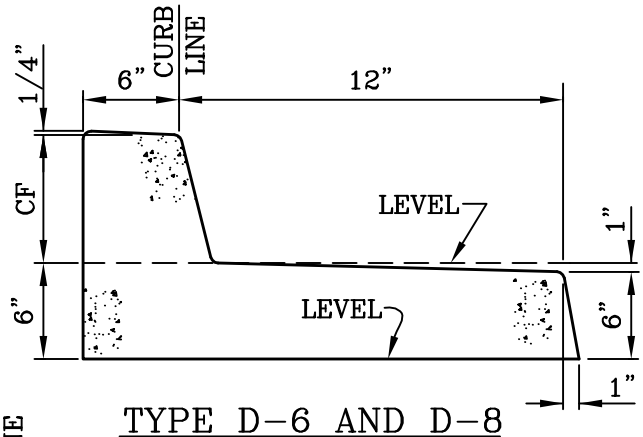

TYPE D–6 AND D–8

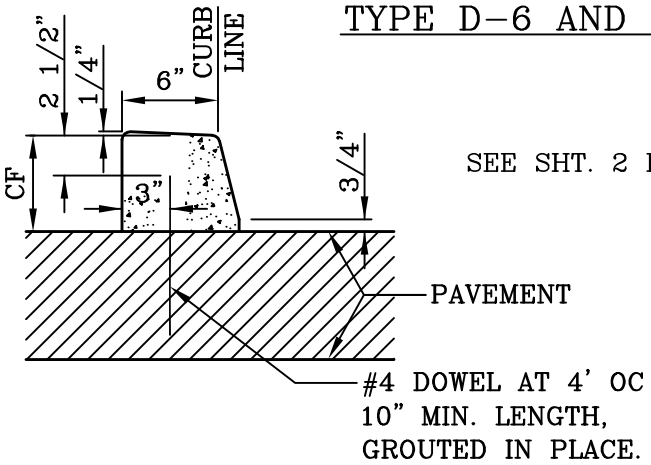

SEE SHT. 2 FOR NOTES

TYPE C–6 AND C–8

CITY OF MISSION VIEJO

CURBS AND GUTTERS

STANDARD PLAN NO.

316

Robert Henderson 9-23-03

APPROVED RCE 30190 DATE

SHT 1 OF 2

NOTES:

1. ALL DIMENSIONS ARE MEASURED IN INCHES.
2. CURB FACE BATTER TO BE 3:12 FOR ALL CURBS.
3. ALL CURBS AND GUTTERS ARE CONSTRUCTED OF PORTLAND CEMENT CONCRETE TYPE V. EXCEPT TYPE E WHICH IS ASPHALT CONCRETE.
4. TYPE C CURB SHALL BE ANCHORED WITH DOWELS AS SHOWN OR WITH AN EPOXY APPROVED BY THE CITY ENGINEER.
5. GRADE SHALL BE MEASURED AT CURB LINE AT TOP OF CURB.
6. ALL EXPOSED CORNERS ON P.C.C. CURBS AND GUTTERS TO BE ROUNDED WITH A 1/2" RADIUS.
7. "CF" IS CURB HEIGHT. IT IS THE LAST NUMBER IN THE DESIGNATION.
8. WEAKENED PLANE JOINTS REQUIRED AT 10' INTERVALS.

CITY OF MISSION VIEJO

CURBS AND GUTTERS
NOTES

STANDARD PLAN NO.
316

Roger Henderson 9-23-03

APPROVED RCE 30190 DATE

SHT 2 OF 2

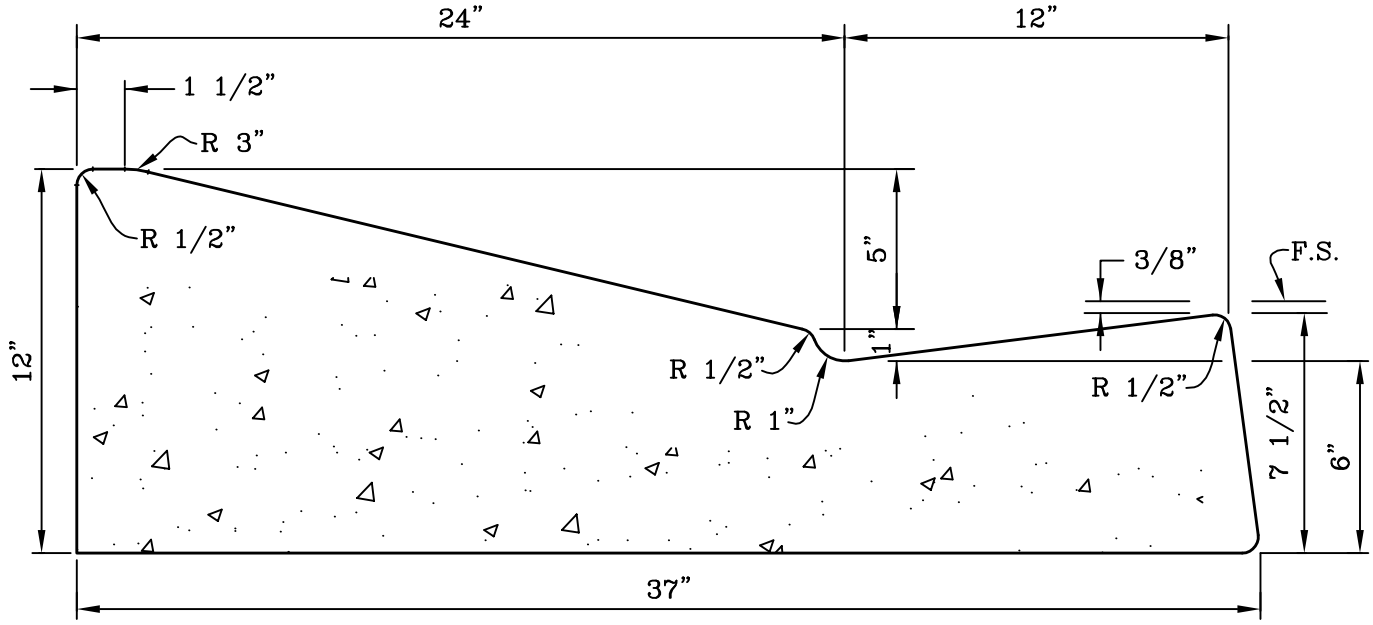

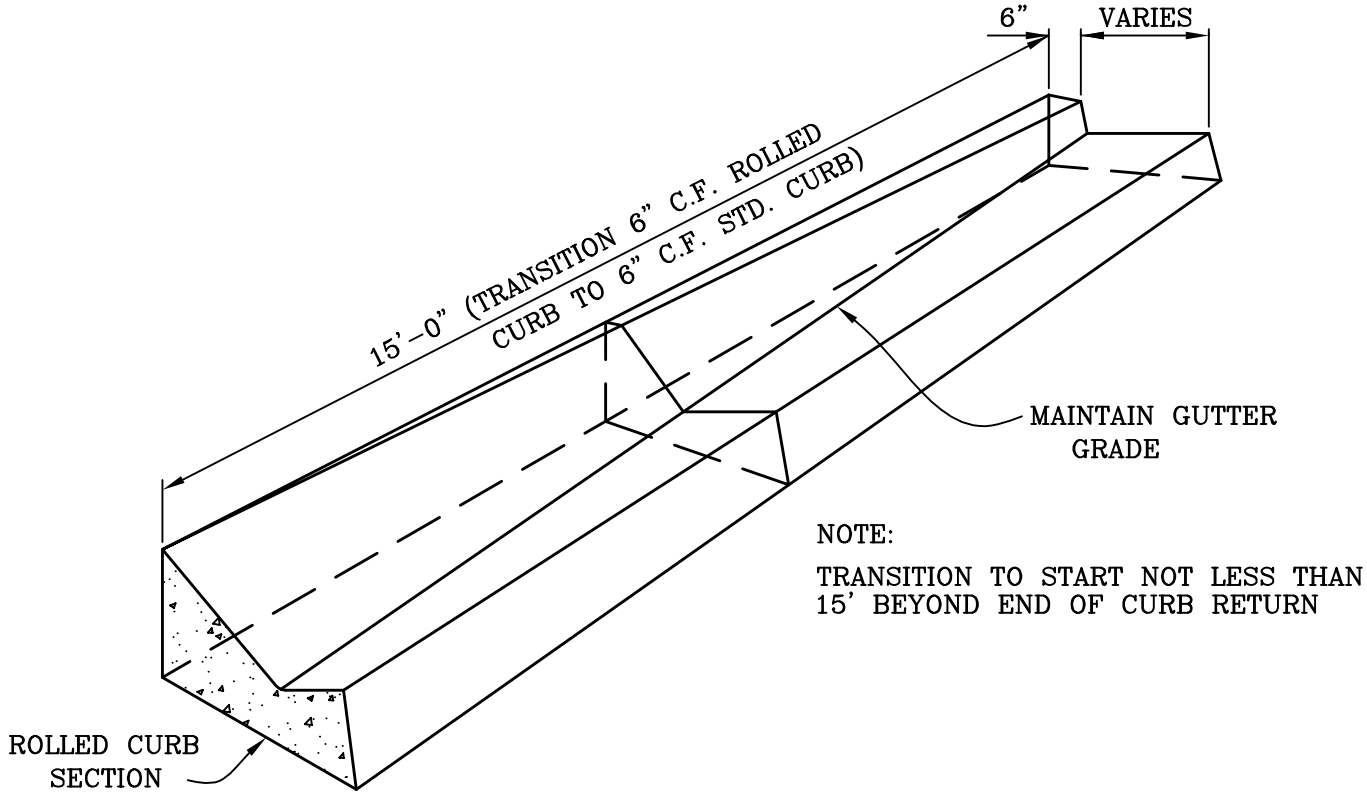

NOTE:

TRANSITION TO START NOT LESS THAN 15’ BEYOND END OF CURB RETURN

CITY OF MISSION VIEJO

CONCRETE ROLLED CURB (PRIVATE STREET)

STANDARD PLAN NO.

317

Roger Henderson 9-23-03

APPROVED RCE 30190 DATE

SHT 1 OF 1

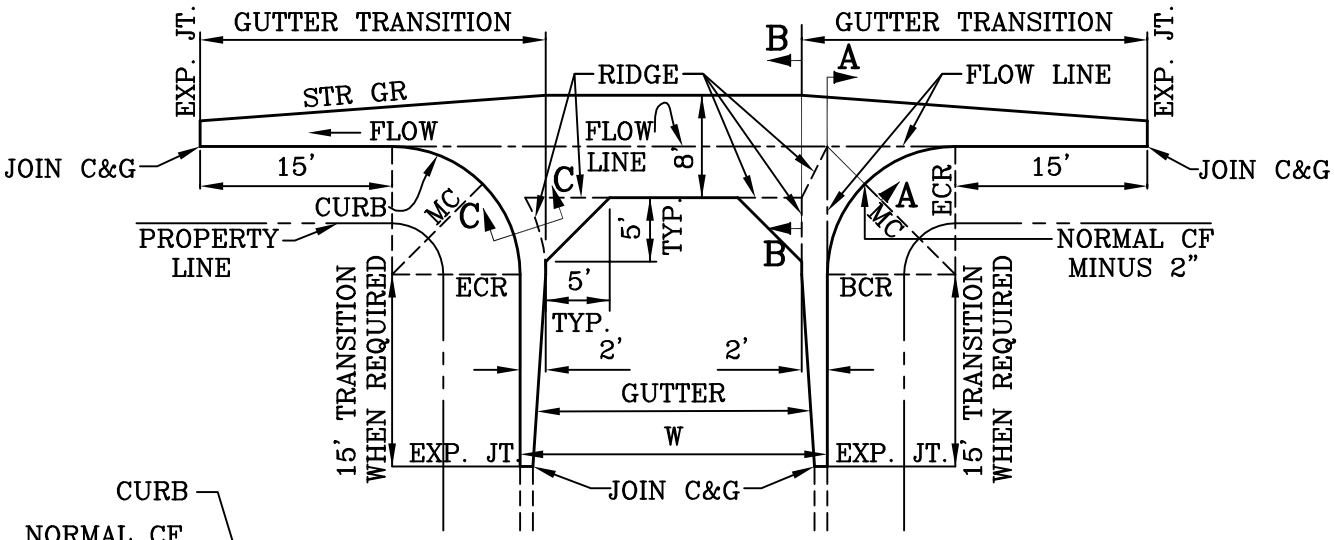

TYPICAL CROSS GUTTER PLAN

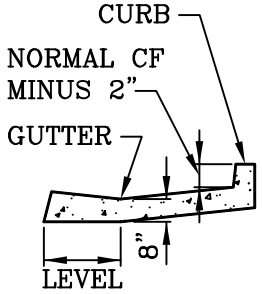

SECTION A–A

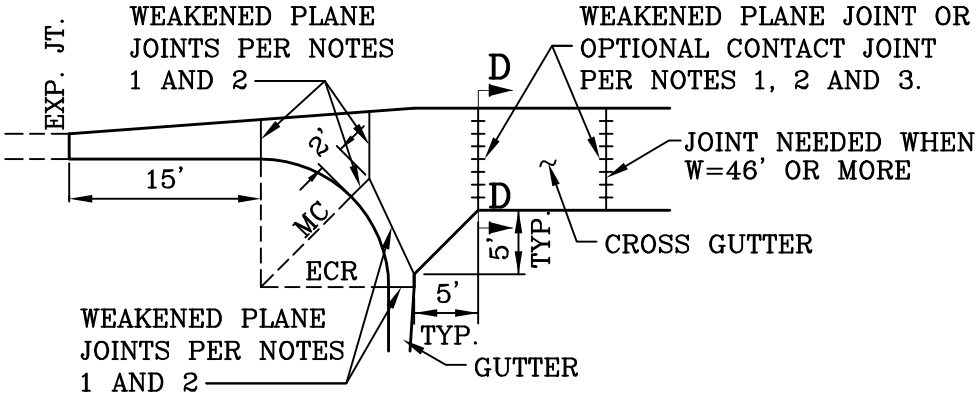

TYPICAL JOINT PLAN

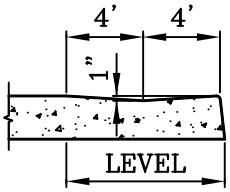

SECTION B–B

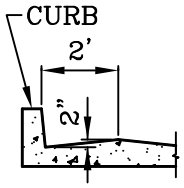

SECTION C–C

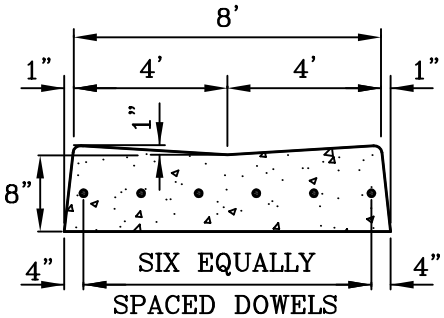

SEE NOTES ON PAGE 2

SECTION D–D

CITY OF MISSION VIEJO

MISSION VIEJO CALIFORNIA 1988	CROSS GUTTER	STANDARD PLAN NO. 319
	APPROVED — RCE 30190 — DATE 9-23-03	SHT 1 OF 2

NOTES:

1. WEAKENED-PLANE AND/OR CONTACT JOINTS SHALL BE PLACED IN CURB AND GUTTER AT LOCATIONS SHOWN ON THE TYPICAL JOINT PLAN SHEET 1.

2. WEAKENED-PLANE JOINTS SHALL BE PLASTIC CONTROL JOINTS OR 1-1/2" DEEP SAW CUTS. CONCRETE SAWING SHALL TAKE PLACE WITHIN 24 HOURS AFTER CONCRETE IS PLACED.

3. DOWELS FOR CONTACT JOINTS SHALL BE NO. 4 BARS 18 INCHES LONG.

4. PLACE A WEAKENED-PLANE OR CONTACT JOINT WHERE LONGITUDINAL ALLEY GUTTER JOINS CONCRETE ALLEY INTERSECTION.

5. ALL EXPOSED CORNERS ON P.C.C. GUTTERS TO BE ROUNDED WITH 1/2" RADIUS.

6. CONCRETE SHALL BE INTEGRAL WITH CURB UNLESS OTHERWISE SPECIFIED.

7. PLACE 6" MIN. THICK A.B. UNDER CROSS GUTTER AND SPANDRELS.

CITY OF MISSION VIEJO

CROSS GUTTER

STANDARD PLAN NO.

319

Ron Henderson 9-23-03

APPROVED RCE 30190 DATE

SHT 2 OF 2

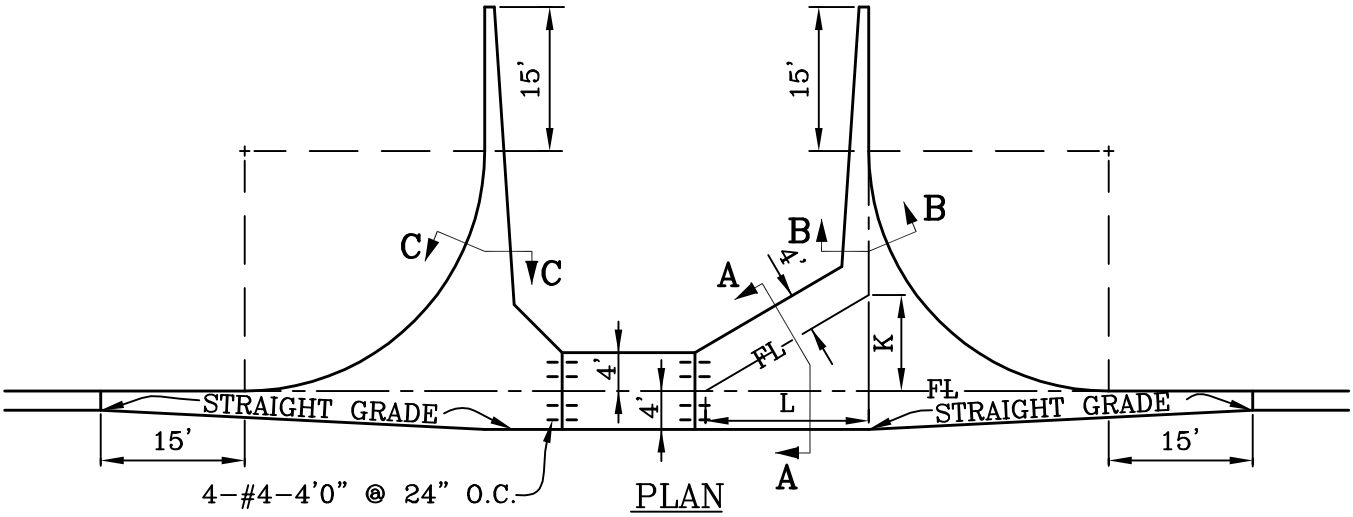

PLAN

NOTE: SEE STD. PLAN 319 FOR JOINT DETAILS

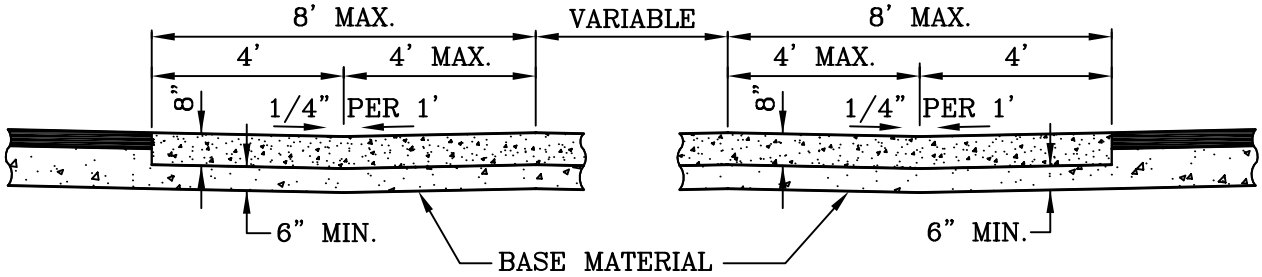

SECTION A-A

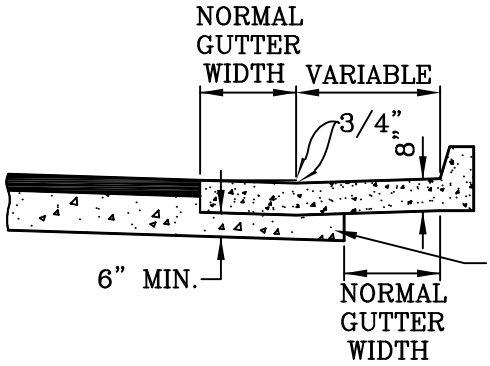

SECTION B-B

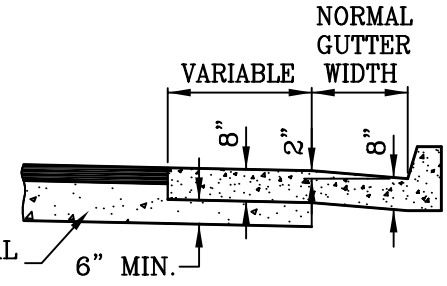

SECTION C-C

NOTES:
1. CURBS AND SPANDRELS ARE MONOLITHIC.
2. FOR ACCESS RAMP DEPRESSIONS SEE STD. PLAN 322.
3. CROSS GUTTER SHALL BE PORTLAND CEMENT CONCRETE TYPE V.

CITY OF MISSION VIEJO

SPECIAL CROSS GUTTER (STEEP GRADES)

STANDARD PLAN NO. 320

Kevin Henderson 9-23-03

APPROVED RCE 30190 DATE

SHT 1 OF 2

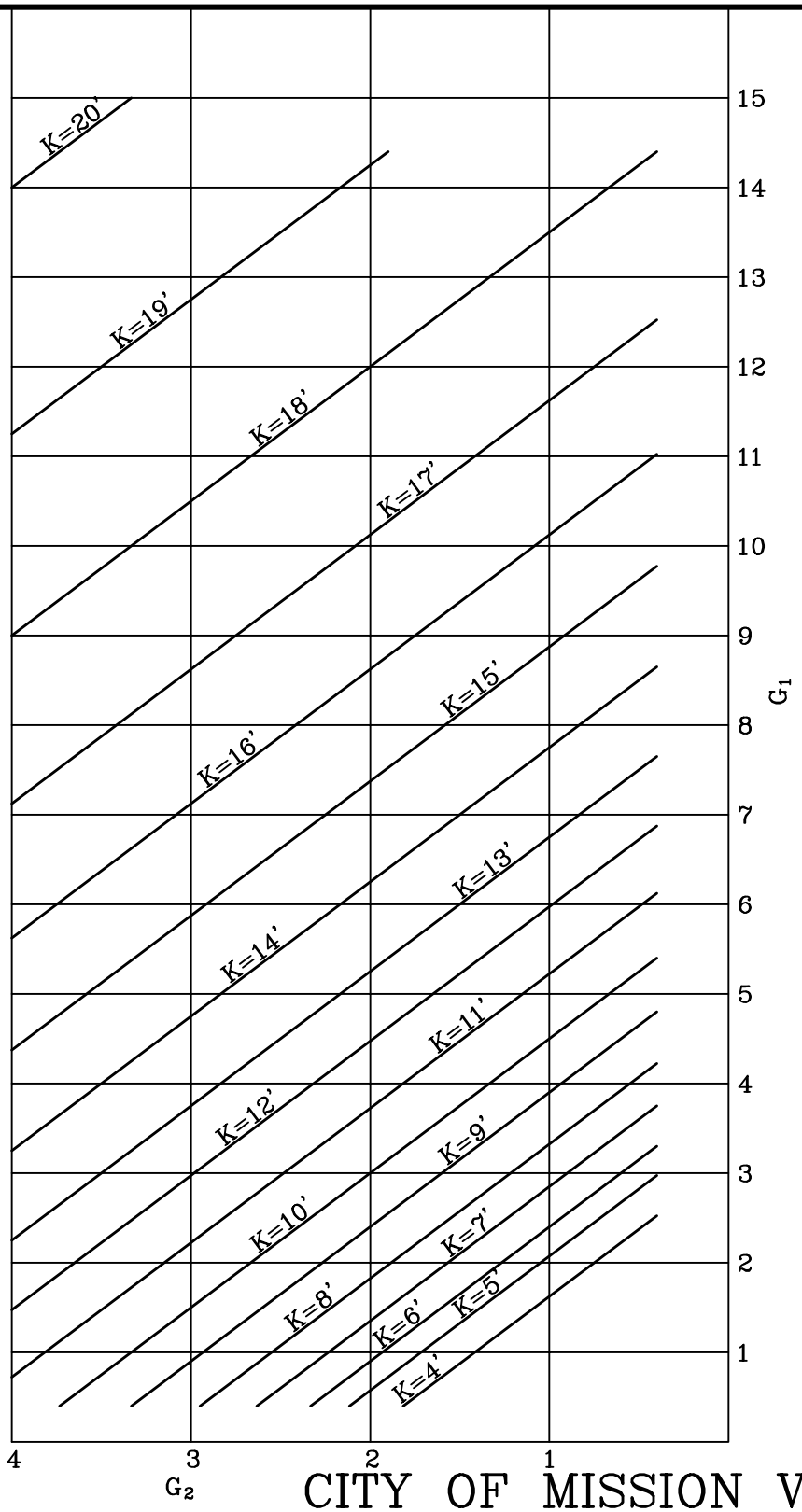

$L = KG_1 / G_3$

$K \leq L$

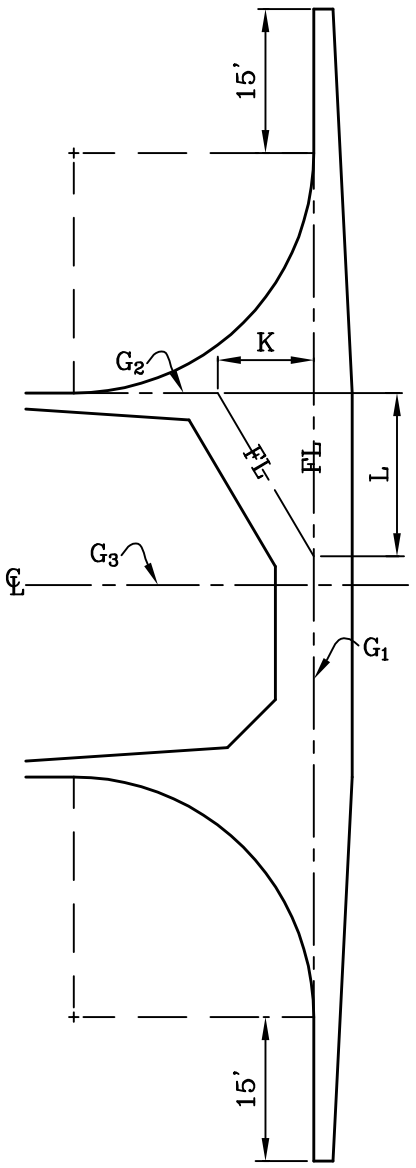

TO BE USED WITH SHEET 1

CITY OF MISSION VIEJO

SPECIAL CROSS GUTTER (STEEP GRADES)

STANDARD PLAN NO.

320

9-23-03

APPROVED RCE 30190 DATE

SHT 2 OF 2

CURB RETURN RADIUS	APPLICATION
25'	RESIDENTIAL STREET INTERSECTING ANOTHER RESIDENTIAL STREET
35'	ARTERIAL HIGHWAY INTERSECTING A RESIDENTIAL STREET OR ARTERIAL HIGHWAY INTERSECTING ANOTHER ARTERIAL HIGHWAY

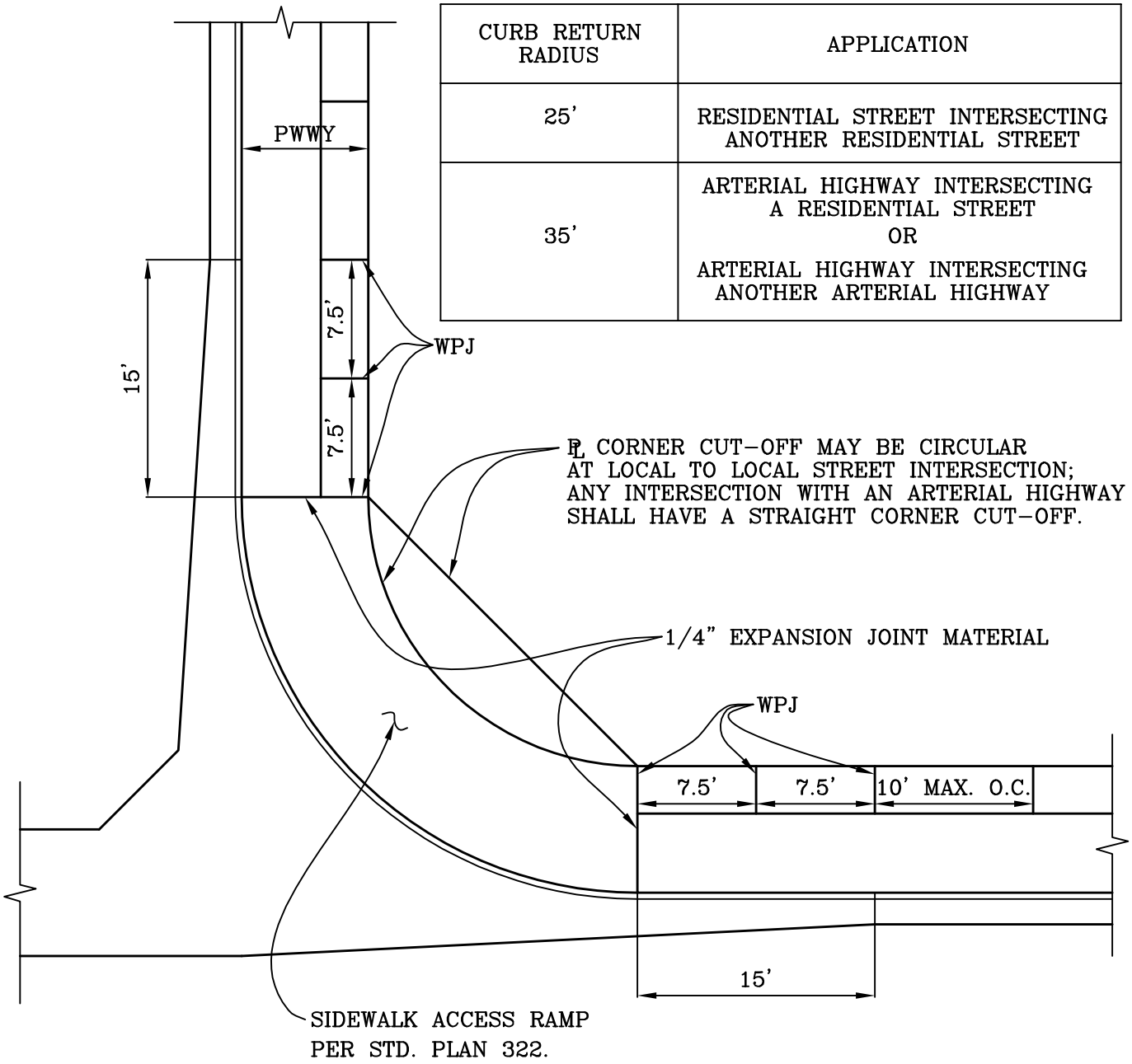

NOTE:
ELEVATION DIFFERENCE BETWEEN B.C.R. AND E.C.R. SHALL NOT EXCEED 4'.

CITY OF MISSION VIEJO

SIDEWALK RETURNS AND CURB RADIUS

STANDARD PLAN NO.

321

APPROVED | RCE 30190 | DATE 9-23-03

SHT 1 OF 3

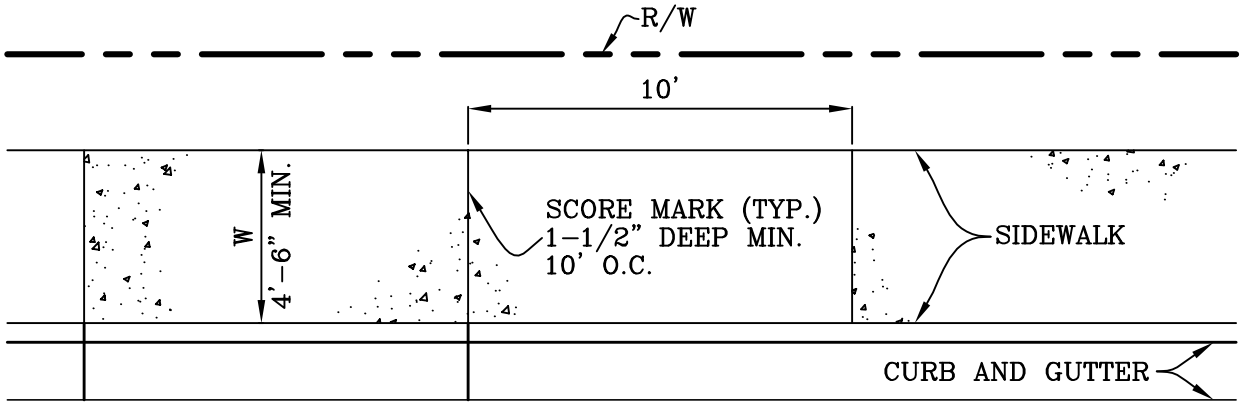

DETAIL 1

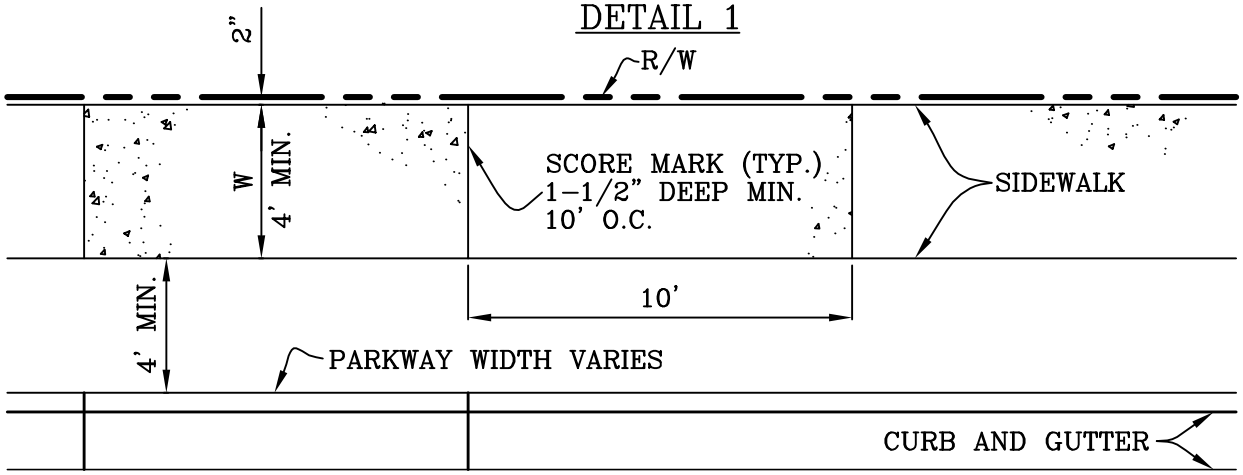

DETAIL 2

NOTES:

1. THICKNESS OF SIDEWALK SHALL BE 4" EXCEPT IN DRIVEWAY APRONS. (STD. 306).
2. CURB AND GUTTER SHALL HAVE 1/4" PREMOLDED EXPANSION JOINTS AT THE ENDS OF CURB RETURNS AND 1-1/2" DEEP WEAKENED PLANE JOINTS AT INTERVALS SHOWN HEREON. JOINTS SHALL HAVE EDGES WITH 1/8" RADII.
3. SEE SHEET 1 OF 3 FOR ADDITIONAL EXPANSION JOINT REQUIREMENTS.
4. SIDEWALK SHALL BE PORTLAND CEMENT CONCRETE TYPE V.
5. ALL SOILS SHALL BE BROUGHT TO MAXIMUM SATURATION AS REQUIRED IN THE APPROVED SOILS REPORT. THE SOILS ENGINEER SHALL PROVIDE CERTIFICATION ON THE FORM PROVIDED BY THE CITY STATING THE MOISTURE CONTENT HAS BEEN MAINTAINED AS REQUIRED PRIOR TO AND DURING THE PLACEMENT OF CONCRETE. IN HILLSIDE AREAS, SOIL SHALL BE SATURATED AS RECOMMENDED BY THE SOILS ENGINEER AND APPROVED BY THE CITY ENGINEER.
6. SIDEWALKS ARE REQUIRED ON THE SIDE OF STREETS WHERE PARKING IS ALLOWED (I.E. PARKING ONE SIDE, SIDEWALK ON THAT SIDE. PARKING BOTH SIDES, SIDEWALK ON BOTH SIDES.) WHERE NO PARKING IS ALLOWED, PEDESTRIAN CIRCULATION MUST BE PROVIDED EITHER WITH A SIDEWALK OR A GREENBELT PATHWAY.
7. PRE-EMERGENT WEED KILLERS MUST BE APPROVED PRIOR TO CONSTRUCTION OF SIDEWALK.

CITY OF MISSION VIEJO

MISSION VIEJO CALIFORNIA	SIDEWALK DETAILS	STANDARD PLAN NO. 321
	Kevin Henderson 9-23-03 APPROVED RCE 30190 DATE	SHT 2 OF 3

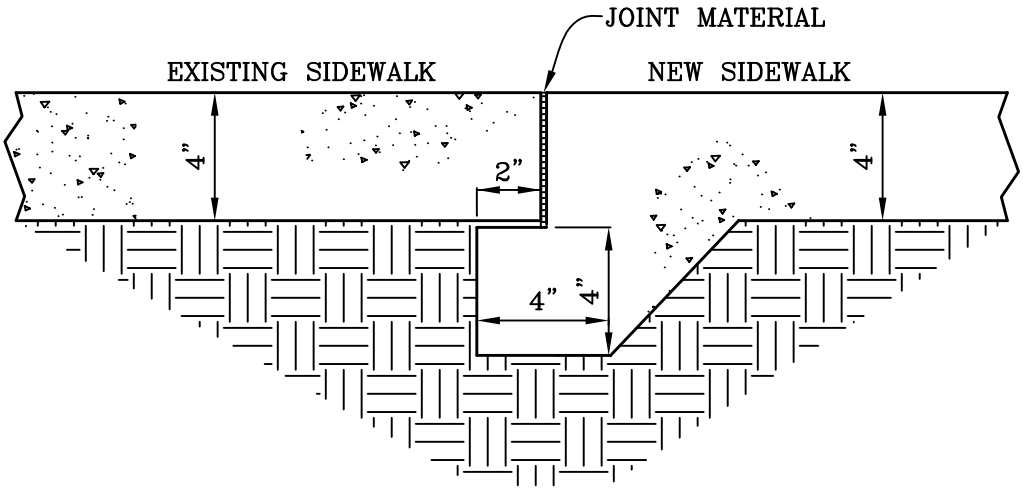

NOTES:

1. ALL APPLICABLE NOTES FROM SHEET 2 SHALL APPLY.
2. KEY NEW SIDEWALK SECTION UNDER EXISTING SIDEWALK.
3. PRESATURATION OF SOIL SHALL BE APPROVED BY INSPECTOR.

CITY OF MISSION VIEJO

SIDEWALK DETAILS

STANDARD PLAN NO.

321

9-23-03

APPROVED RCE 30190 DATE

SHT 3 OF 3

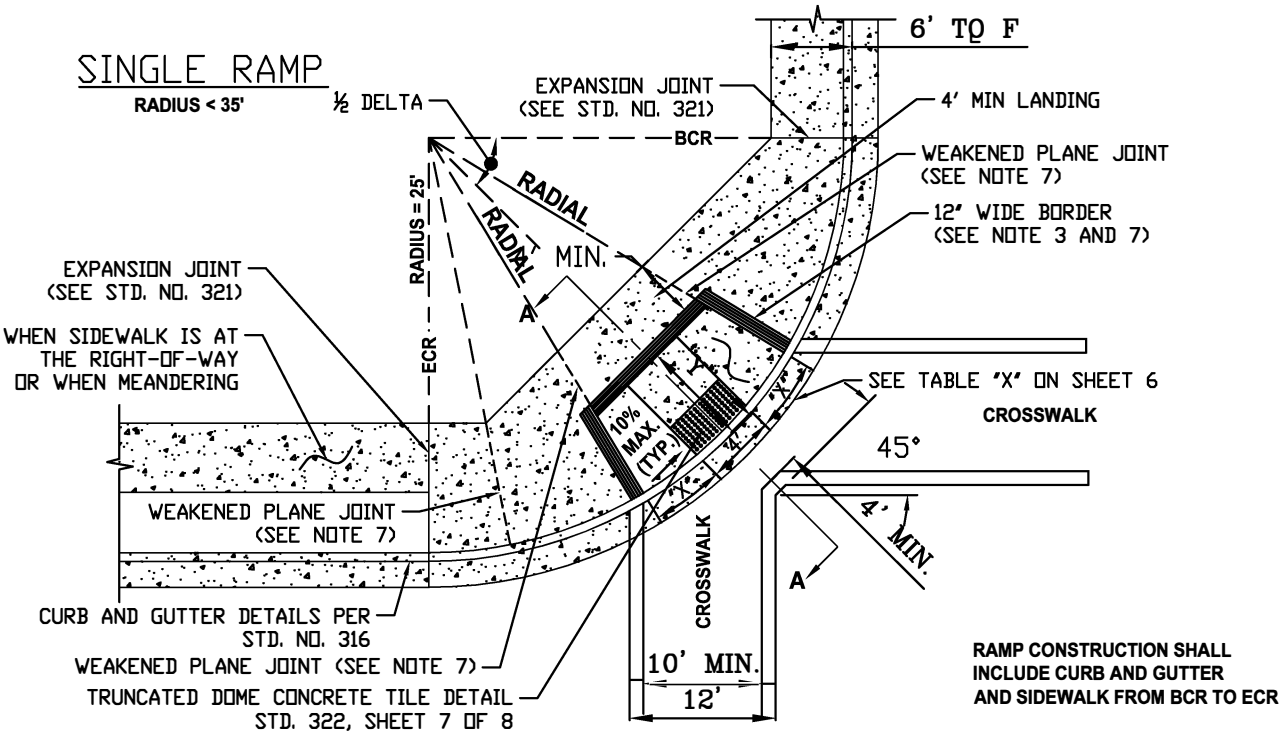

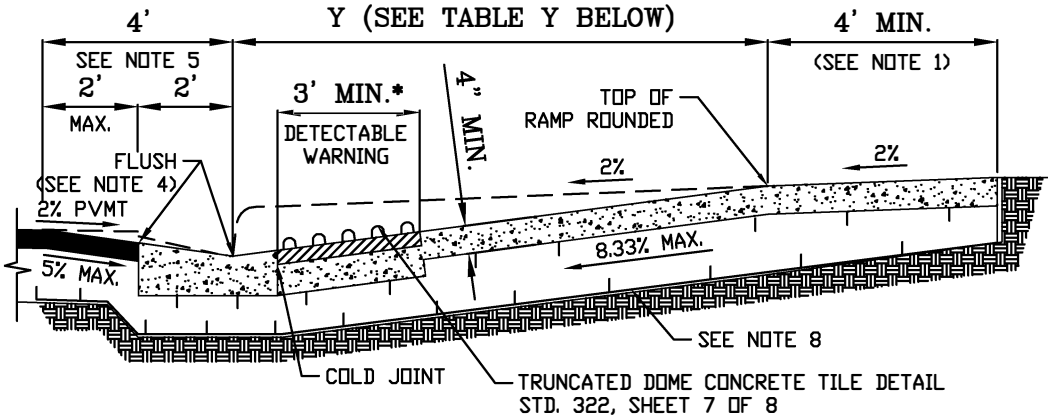

SECTION A - A

SEE SHEET 8 OF 8 FOR NOTES.

TABLE Y

CF	Y*
6"	7.90'
8"	10.53'

$$Y = \frac{\text{CURB FACE (FT.)}}{6.33\%}$$

* 'Y' SHALL NOT EXCEED 10.53', UNLESS APPROVED BY THE CITY ENGINEER

CITY OF MISSION VIEJO

ACCESS RAMPS
CASE A

STANDARD PLAN NO.

322

08/07/19

APPROVED BY: CITY ENGINEER RCE 51160 DATE

SHT 1 OF 8

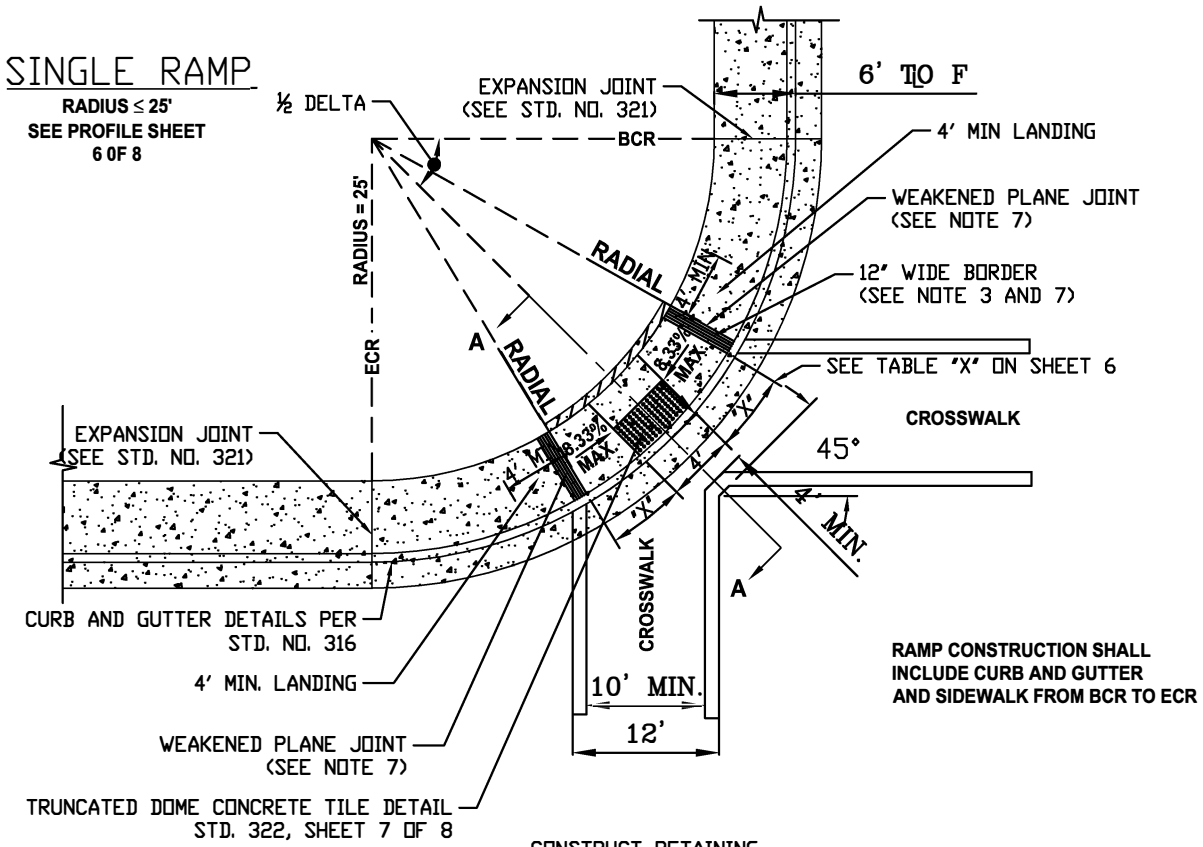

RAMP CONSTRUCTION SHALL INCLUDE CURB AND GUTTER AND SIDEWALK FROM BCR TO ECR

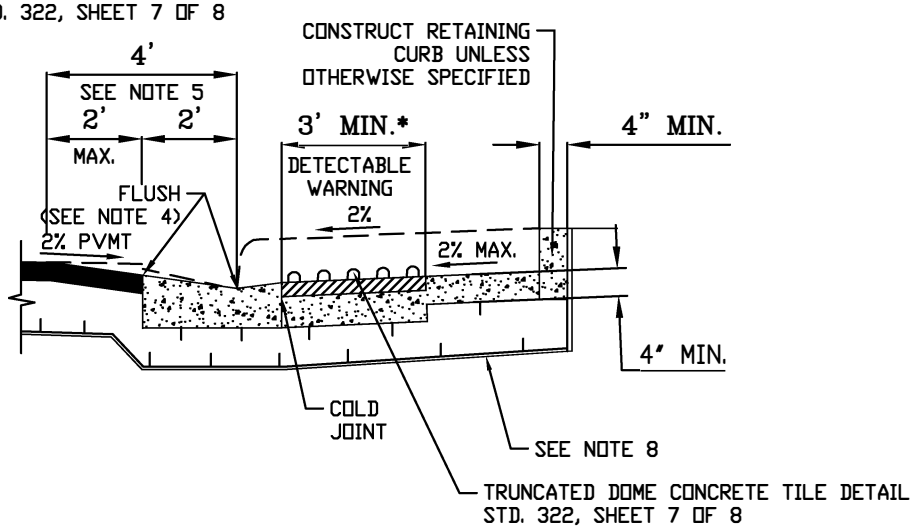

SECTION A - A

SEE SHEET 8 OF 8 FOR NOTES.

CITY OF MISSION VIEJO

ACCESS RAMPS
CASE B

STANDARD PLAN NO.

322

08/07/19

APPROVED BY: CITY ENGINEER RCE 51160 DATE

SHT 2 OF 8

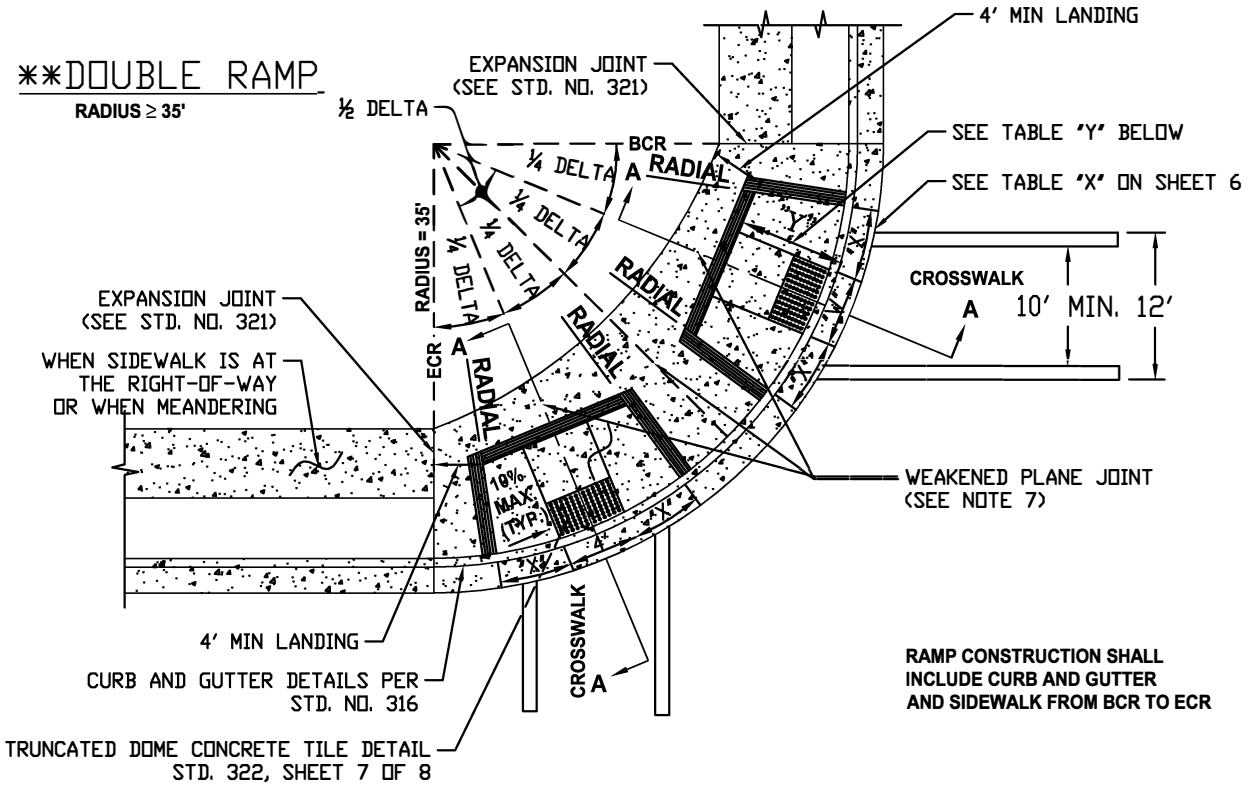

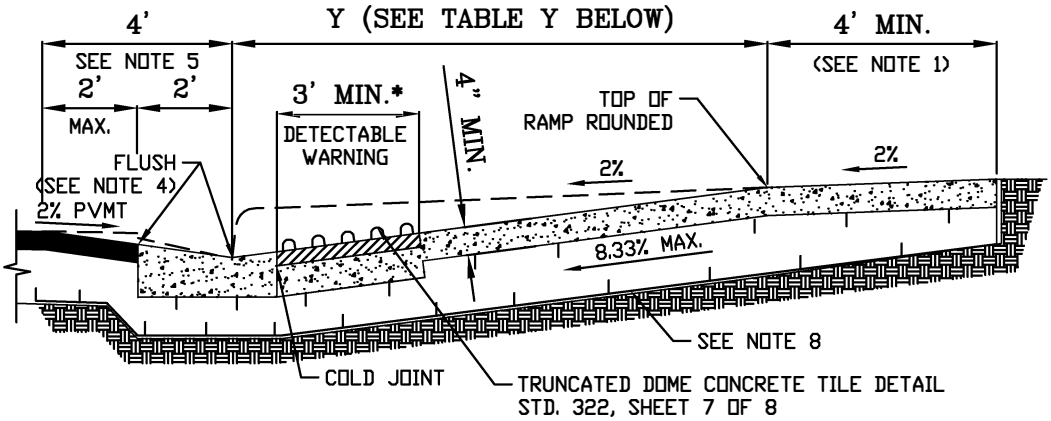

SECTION A - A

SEE SHEET 8 OF 8 FOR NOTES.

TABLE - Y

CF	Y*
6'	7.90'
8'	10.53'

$$Y = \frac{\text{CURB FACE (FT.)}}{6.33\%}$$

* 'Y' SHALL NOT EXCEED 10.53', UNLESS APPROVED BY THE CITY ENGINEER
** ELIMINATE ONE RAMP IF NO FUTURE PATH OF TRAVEL EXIST

CITY OF MISSION VIEJO

MISSION VIEJO 1988 CALIFORNIA

ACCESS RAMPS
CASE C

STANDARD PLAN NO.

322

08/07/19

APPROVED BY: CITY ENGINEER RCE 51160 DATE

SHT 3 OF 8

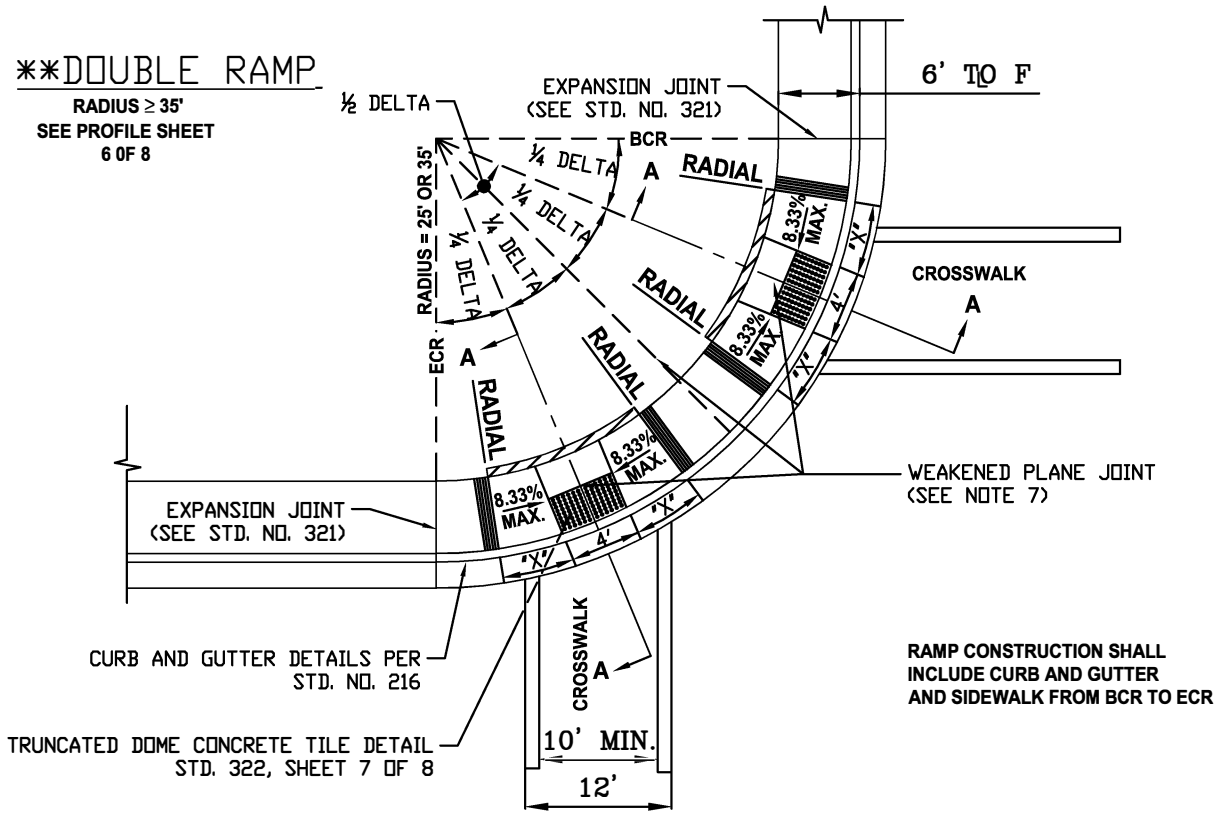

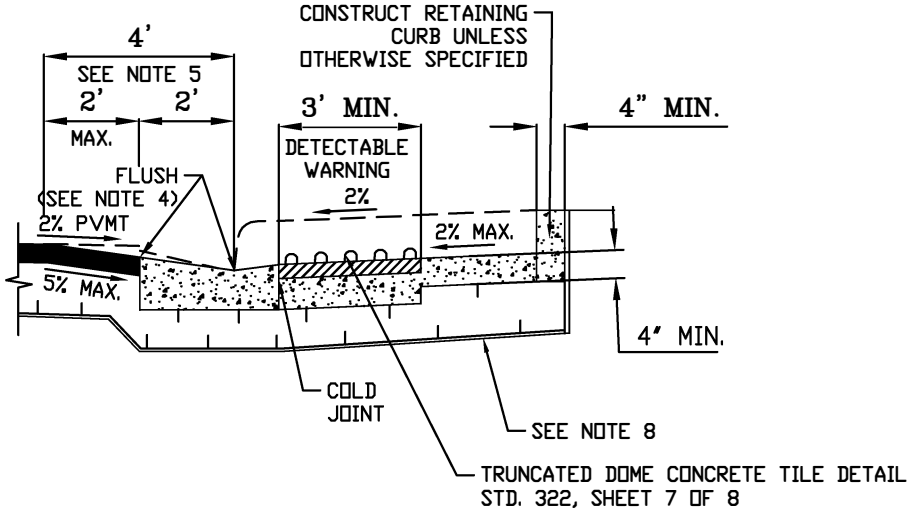

SECTION A - A

SEE SHEET 8 OF 8 FOR NOTES.

** ELIMINATE ONE RAMP IF NO FUTURE PATH OF TRAVEL

CITY OF MISSION VIEJO

MISSION VIEJO 1988 CALIFORNIA	ACCESS RAMPS CASE D	STANDARD PLAN NO. 322
	APPROVED BY: CITY ENGINEER RCE 51160 — DATE 08/07/19	SHT 4 OF 8

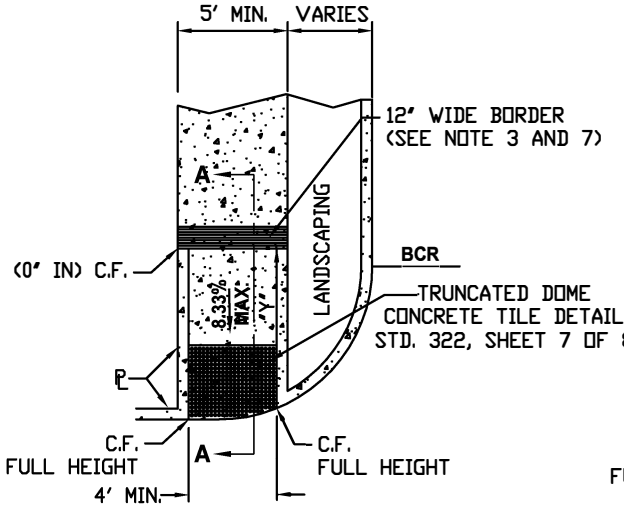

CASE E

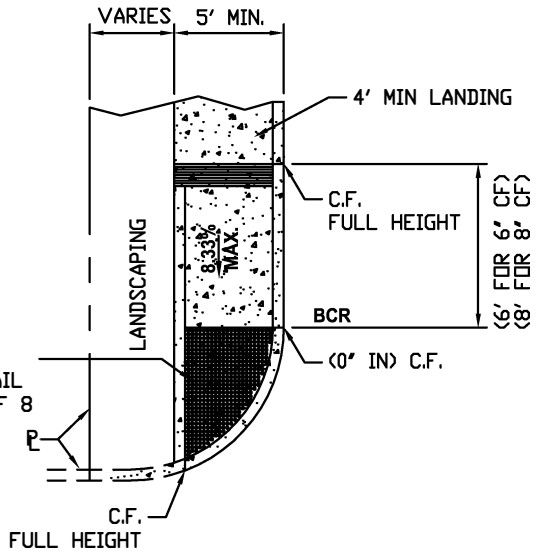

CASE F

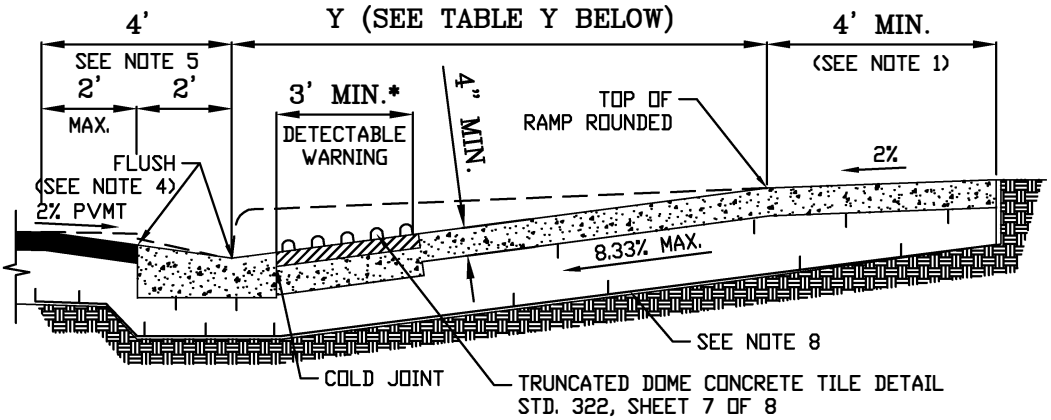

SECTION A - A

SEE SHEET 8 OF 8 FOR NOTES.

$$Y = \frac{\text{CURB FACE (FT.)}}{6.33\%}$$

TABLE - Y

CF	Y*
6"	7.90'
8"	10.53'

* 'Y' SHALL NOT EXCEED 10.53', UNLESS APPROVED BY THE CITY ENGINEER

CITY OF MISSION VIEJO

MISSION VIEJO CALIFORNIA 1988

ACCESS RAMPS
CASE E & CASE F

STANDARD PLAN NO.

322

08/07/19

APPROVED BY: CITY ENGINEER RCE 51160 DATE

SHT 5 OF 8

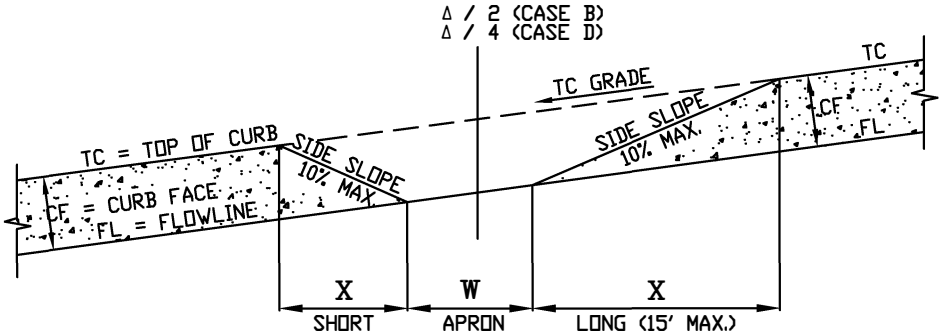

PROFILE

CASE B & D

CF (IN)	RADIUS (FT)	SIDE SLOPE	X	TC GRADE (ALONG CURB RETURN)					
				1%	2%	3%	4%	5%	6%
6"	35'	10%	X_S	4.6	4.2	3.9	3.6	3.4	3.2
			X_L	5.6	6.3	7.2	8.4	10.0	12.5
8"	35'	10%	X_S	6.1	5.6	5.2	4.8	4.5	4.2
			X_L	7.5	8.4	9.6	11.2	13.4	15.0

TABLE - X

TO CALCULATE "X" DIMENSION

SHORT SIDE (DOWN SLOPE):

$$X_S\,(FT) = \frac{\text{CURBFACE (FT)}}{\text{SIDE SLOPE} + \text{TC GRADE}}$$

LONG SIDE (UP SLOPE):

$$X_L\,(FT) = \frac{\text{CURBFACE (FT)}}{\text{SIDE SLOPE} - \text{TC GRADE}}$$

ENGINEER TO SHOW X_S AND X_L ON IMPROVEMENT PLANS

GROOVE DETAIL

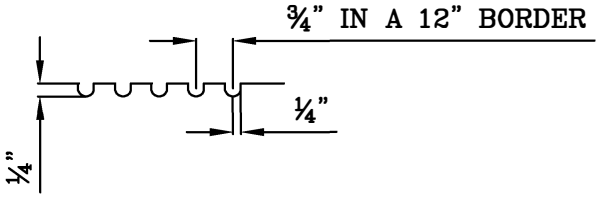

CITY OF MISSION VIEJO

CURB RAMP

STANDARD PLAN NO.

322

08/07/19

APPROVED BY: CITY ENGINEER RCE 51160 DATE

SHT 6 OF 8

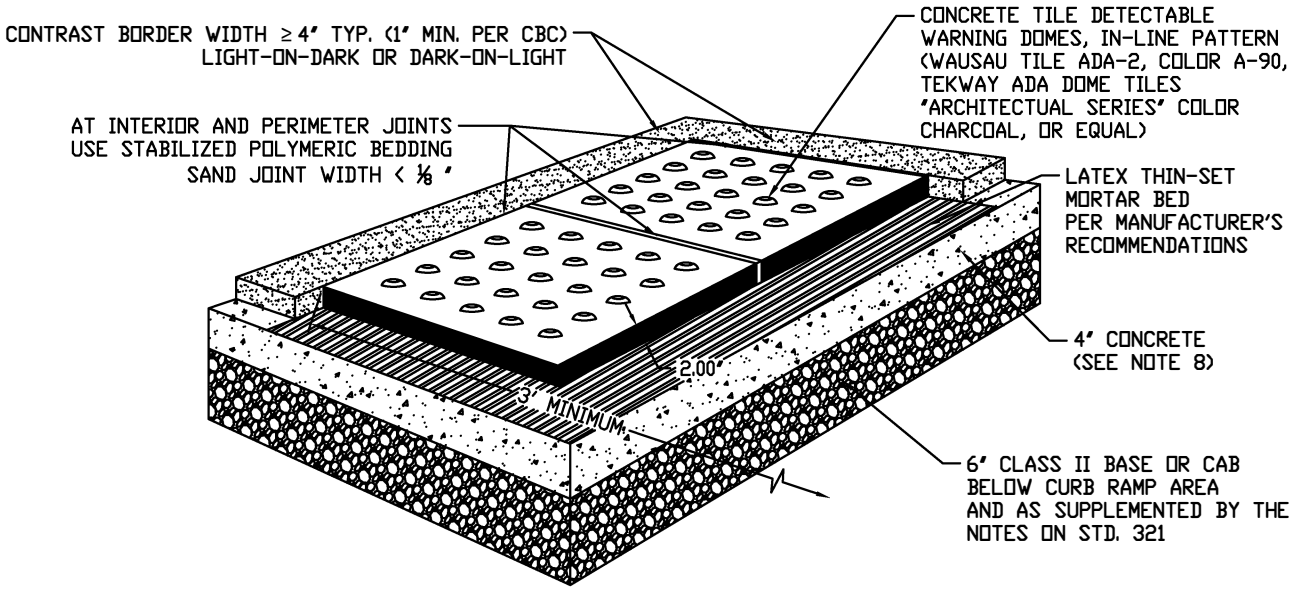

ISOMETRIC VIEW

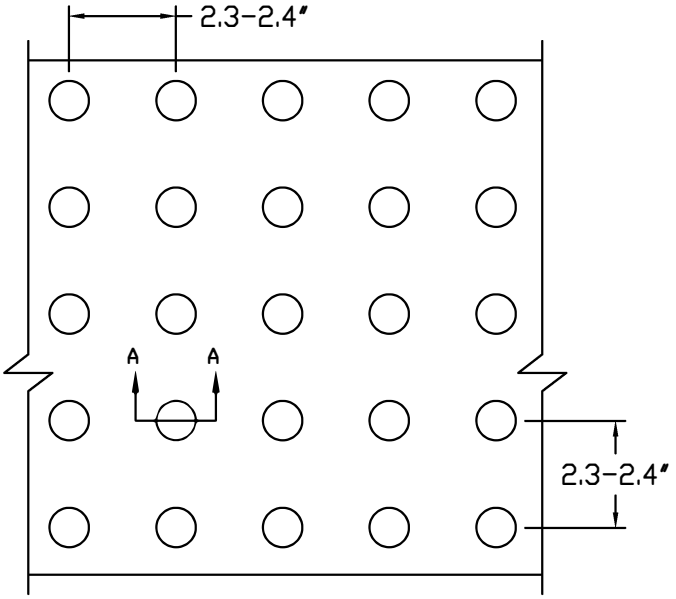

CONCRETE TILE DETECTABLE WARNING DOMES

IN-LINE PATTERN

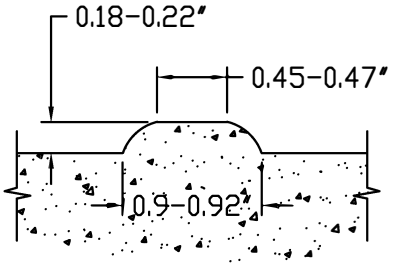

SECTION A - A

CITY OF MISSION VIEJO

TRUNCATED DOME CONCRETE TILE DETAIL

STANDARD PLAN NO.

322

08/07/19

APPROVED BY: CITY ENGINEER RCE 51160 DATE

SHT 7 OF 8

CONSTRUCTION NOTES:

1. IF DISTANCE FROM CURB TO BACK OF SIDEWALK IS TOO SHORT TO ACCOMMODATE RAMP AND 4-FOOT LANDING, THEN USE THE CASE "B" RAMP.

2. IF SIDEWALK IS LESS THAN 6 FEET WIDE, THE FULL WIDTH OF THE SIDEWALK SHALL BE DEPRESSED AS SHOWN IN CASE B. MINIMUM SIDEWALK WIDTH IS 4 FEET FROM BACK OF CURB.

3. THE RAMP SHALL HAVE A 12-INCH-WIDE BORDER WITH GROOVES ¼" WIDE AND ¼" DEEP APPROXIMATELY ¾" ON CENTER. SEE GROOVING DETAIL ON SHEET 6 OF 8.

4. TRANSITIONS FROM RAMPS TO WALKS, GUTTERS, OR STREETS SHALL BE FLUSH AND FREE OF ABRUPT CHANGES.

5. MAXIMUM SLOPES OF ADJOINING GUTTERS: THE ROAD SURFACE IMMEDIATELY ADJACENT TO THE CURB RAMP AND CONTINUOUS PASSAGE TO THE CURB RAMP SHALL NOT EXCEED 5% WITHIN 4 FEET OF THE BOTTOM OF THE CURB RAMP.

6. RAMP SIDE SLOPE VARIES UNIFORMLY FROM A MAXIMUM OF UP TO 10% AT CURB TO CONFORM WITH LONGITUDINAL SIDEWALK SLOPE ADJACENT TO TOP OF THE RAMP (EXCEPT IN CASE B).

7. CONSTRUCT EXPANSION JOINTS AT ¼ AND ¾ DELTAS WHEN RADIUS EQUALS 35 FEET, AT INSIDE EDGE OF GROOVED BORDER WHEN RADIUS EQUALS 25 FEET, AND RADIALLY IF ANGLE POINT OCCURS.

8. CONCRETE SPECIFICATION PER CITY STANDARD 200 - CONCRETE SPECIFICATIONS.

DETECTABLE WARNING NOTES:

1. TRUNCATED DOMES SHALL BE WAUSAU TILE, TYPE 3, SERIES U4008 OR EQUAL, IN LINE, PRE-CAST CONCRETE TILES AND GROUTED IN PLACE. NO SURFACE APPLIED DOME MATS ARE ALLOWED UNLESS APPROVED BY CITY ENGINEER. USE STABILIZED POLYMERIC BEDDING SAND AT TRUNCATED DOME TILES AT INTERIOR AND PERIMETER JOINTS. JOINT WIDTH < ⅛ ".

2. CURB RAMPS REQUIRE DETECTABLE WARNING DOMES FOR THE FULL WIDTH AND THREE (3) FEET IN DEPTH OF THE CURB RAMP SLOPE FROM THE CURB LINE WITHIN THE PUBLIC RIGHT-OF-WAY.

3. PRIVATE (ONSITE) TRUNCATED DOME INSTALLATION TO EXTEND FULL WIDTH AND DEPTH OF RAMP PER CALIFORNIA BUILDING CODE, EXCLUDING PRIVATELY FUNDED SINGLE-FAMILY RESIDENCES.

4. THREE RUNNING FEET OF TRUNCATED DOMES AT FLUSH CURB INSTALLATIONS ARE REQUIRED FOR HAZARDOUS VEHICULAR AREAS. BOLLARDS ARE UTILIZED FOR PEDESTRIAN PROTECTION AT FLUSH CURB RETURNS OR EQUIVALENT FACILITIES AS APPROVED BY THE CITY ENGINEER.

5. SUBMIT CONCRETE DOME TILE AND POLYMERIC BEDDING SAND SPECIFICATIONS OR SAMPLES TO THE CITY FOR APPROVAL PRIOR TO INSTALLATION.

6. THE DETECTABLE WARNING SURFACE SHALL BE LOCATED SO THAT THE EDGE NEAREST THE CURB LINE IS 6" FROM THE CURB FACE.

7. MATCH ALL TILE CORNERS SUCH THAT ALL TRUNCATED DOME TILES ALIGN AND MAINTAIN DOME DIMENSIONAL SPACING. TRUNCATED DOME TILES SHALL BE ALIGNED PARALLEL WITH RAMP SLOPE DIRECTION. TRUNCATED DOME TILES CUT TO MATCH CURB RETURN RADIUS. GRIND EDGE TO AVOID TRIP HAZARD, AS REQUIRED.

CITY OF MISSION VIEJO

MISSION VIEJO CALIFORNIA 1988	CURB RAMP CONSTRUCTION NOTES	STANDARD PLAN NO. 322
	08/07/19	
	APPROVED BY: CITY ENGINEER RCE 51160 DATE	SHT 8 OF 8

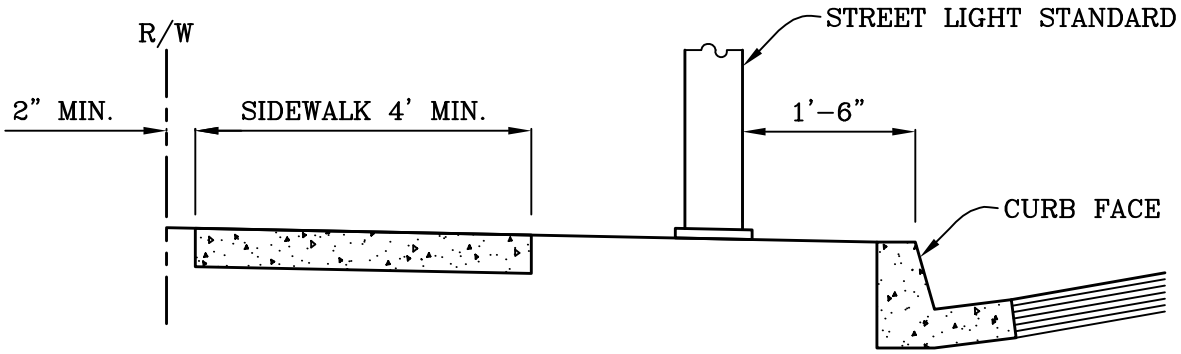

CASE 1

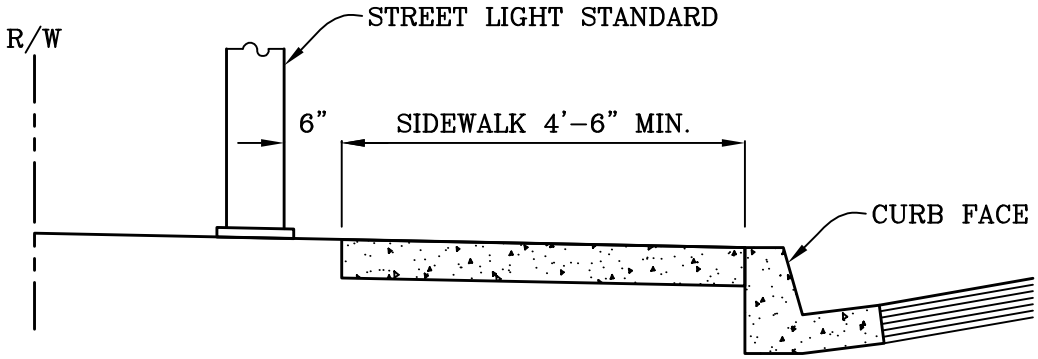

CASE 2

NOTE:
SEE STD. PLAN 329 FOR STREET LIGHTING DESIGN INFORMATION.

CITY OF MISSION VIEJO

STREET LIGHTS (PARKWAY LOCATION)

STANDARD PLAN NO.

323

9-23-03

APPROVED RCE 30190 DATE

SHT 1 OF 1

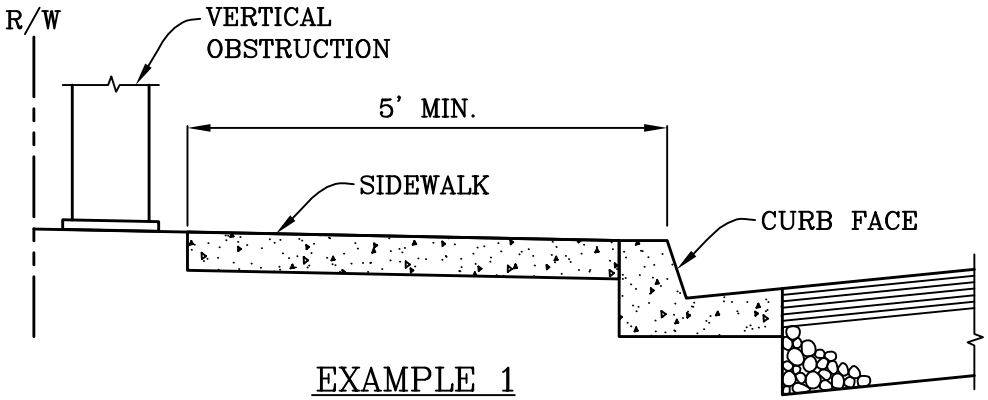

EXAMPLE 1

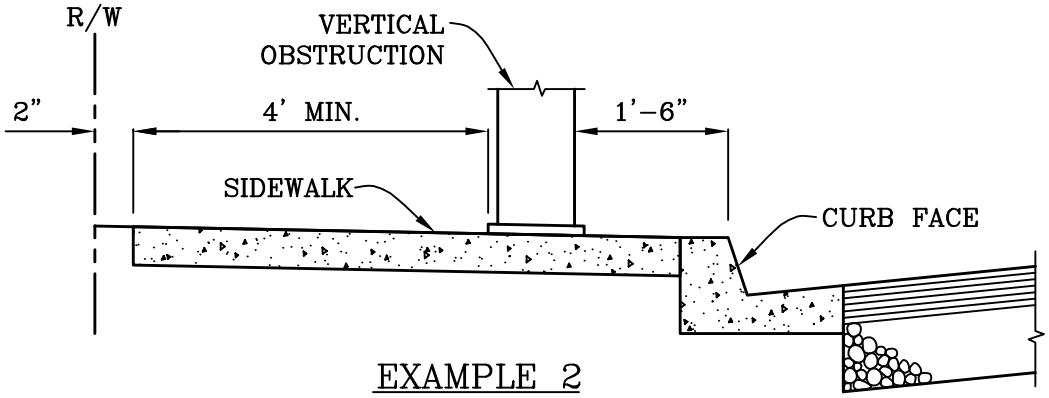

EXAMPLE 2
PROFILE

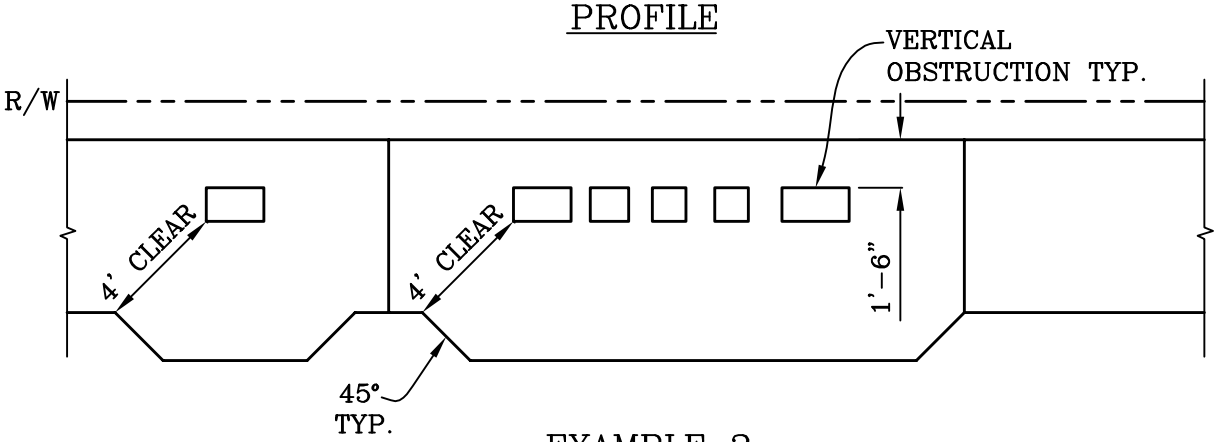

EXAMPLE 2
PLAN

SEE NOTES ON SHEET 2

CITY OF MISSION VIEJO

	PARKWAY OBSTRUCTIONS	STANDARD PLAN NO. 324
	APPROVED RCE 30190 DATE 9-23-03	SHT 1 OF 2

NOTES:

1. THE DISTANCE FROM THE CURB TO ANY PART OF A FIRE HYDRANT SHALL BE NOT LESS THAN TWO (2) FEET NOR GREATER THAN SEVEN (7) FEET.
2. FOR ANY VERTICAL OBSTRUCTION, THE MINIMUM CLEARANCE FROM THE CURB SHALL BE 1'–6".
3. THE MINIMUM WIDTH OF CLEAR SIDEWALK AREA SHALL BE FOUR (4) FEET FROM ANY VERTICAL OBSTRUCTION.
4. ANY UTILITY VAULT WITHIN THE SIDEWALK AREA SHALL HAVE A BOLT DOWN COVER WITH A SLIP RESISTANT FINISH.
5. ANY PARKWAY OBSTRUCTION SHALL BE SURROUNDED BY A CONCRETE PAD.
6. REFER TO STD. PLAN 321 FOR SIDEWALK CONSTRUCTION.

CITY OF MISSION VIEJO

	PARKWAY OBSTRUCTIONS	STANDARD PLAN NO. 324
	Kevin Henderson 9-23-03	
	APPROVED RCE 30190 DATE	SHT 2 OF 2

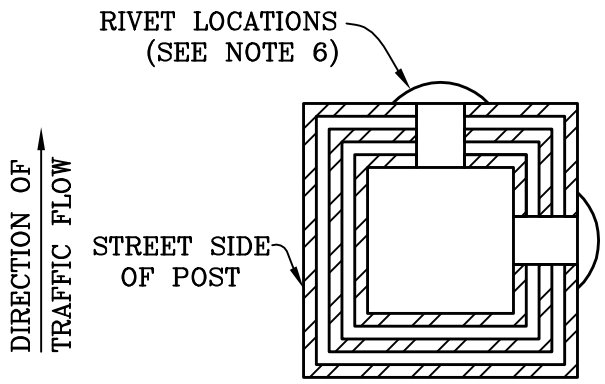

SECTION A–A

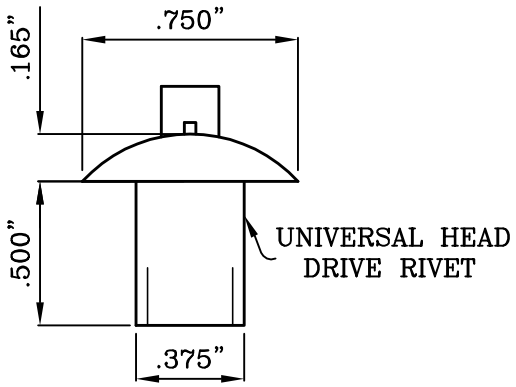

RIVET DETAIL

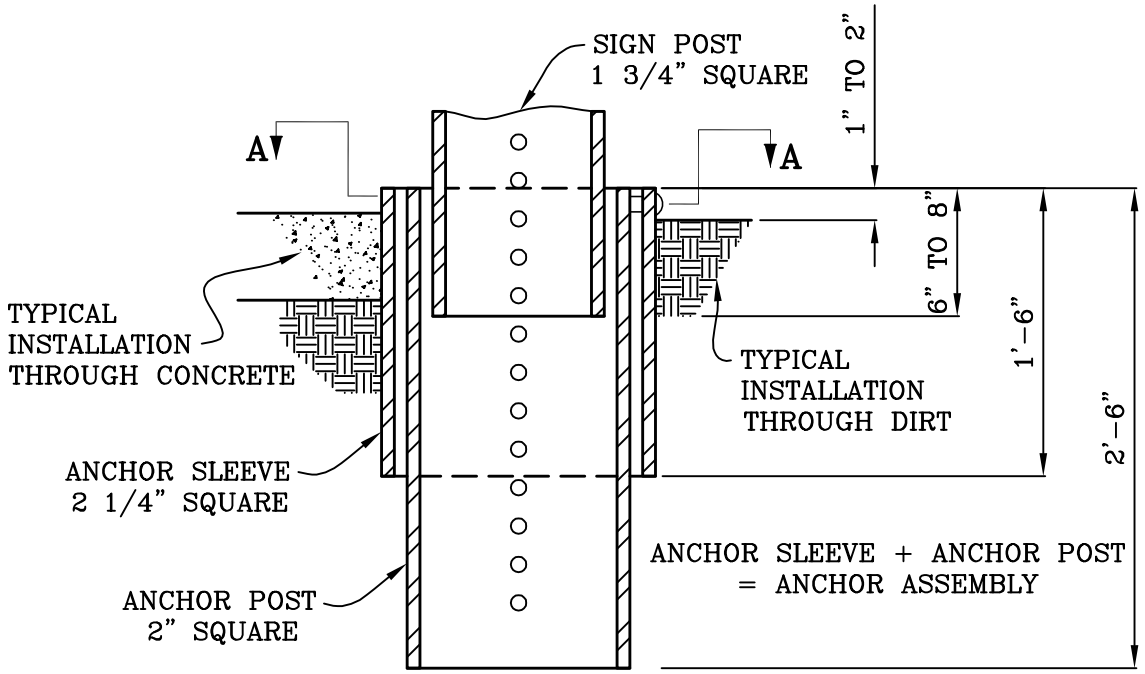

TYPICAL SECTION

SEE SHEET 2 FOR NOTES

CITY OF MISSION VIEJO

SIGN POST INSTALLATION

STANDARD PLAN NO.

325

APPROVED RCE 30190 DATE 9-23-03

SHT 1 OF 2

NOTES:

1. SQUARE PERFORATED STEEL TUBE WITH BREAK-AWAY BASE, "TELESPAR" OR EQUAL, SHALL BE USED FOR ALL TRAFFIC CONTROL AND INFORMATIONAL SIGNS.

2. THE NUMBER OF POSTS REQUIRED FOR SIGN INSTALLATION SHALL BE DETERMINED BY THE AREA OF THE SIGN OR COMBINATION OF SIGNS TO BE INSTALLED. A SINGLE POST SHALL BE USED WHERE BOTH THE LENGTH AND WIDTH ARE LESS THAN 48", WITH THE EXCEPTION OF A 48" x 48" STOP SIGN. DOUBLE POSTS SHALL BE USED WHERE EITHER THE LENGTH OR THE WIDTH EXCEEDS 48".

3. THE ANCHOR ASSEMBLY SHALL CONSIST OF A 2" SQUARE BY 2'-6" ANCHOR POST AND A 2 1/4" SQUARE BY 1'-6" ANCHOR SLEEVE.

4. THE ANCHOR ASSEMBLY, CONSISTING OF THE ANCHOR POST AND ANCHOR SLEEVE, SHALL BE DRIVEN SIMULTANEOUSLY UNTIL ONLY 1" TO 2" REMAINS ABOVE GROUND LEVEL. THE TOPS OF BOTH PIECES SHALL BE FLUSH.

5. ALL DIRT SHALL BE REMOVED FROM THE INSIDE TOP 8" OF THE ANCHOR ASSEMBLY TO ALLOW FOR INSTALLATION OF THE SIGN POST.

6. INSTALL THE 1 3/4" SQUARE SIGN POST 6" TO 8" INTO THE ANCHOR ASSEMBLY AND SECURE IN PLACE WITH TWO 5/16" UNIVERSAL HEAD DRIVE RIVETS AS SHOWN. THE RIVETS SHALL BE INSTALLED ON THE SIDE OPPOSITE TRAFFIC FLOW AND THE SIDE AWAY FROM TRAFFIC AS SHOWN IN ORDER TO ACHIEVE THE MAXIMUM BREAK-AWAY EFFECT.

7. INSTALLATION ACCORDING TO THESE REQUIREMENTS IS ESSENTIAL TO MAINTAIN THE BREAK-AWAY CHARACTERISTICS OF THE POST SYSTEM. UNDER NO CIRCUMSTANCES SHALL THE ANCHOR ASSEMBLY BE SECURED IN CONCRETE FOOTING.

8. LOCATION AND HEIGHT OF SIGN SHALL CONFORM TO STANDARD PLANS 324, 328, AND CALTRANS SIGN REQUIREMENTS.

CITY OF MISSION VIEJO

MISSION VIEJO CALIFORNIA 1988	SIGN POST INSTALLATION	STANDARD PLAN NO. 325
	Kevin Henderson 9-23-03	
	APPROVED RCE 30190 DATE	SHT 2 OF 2

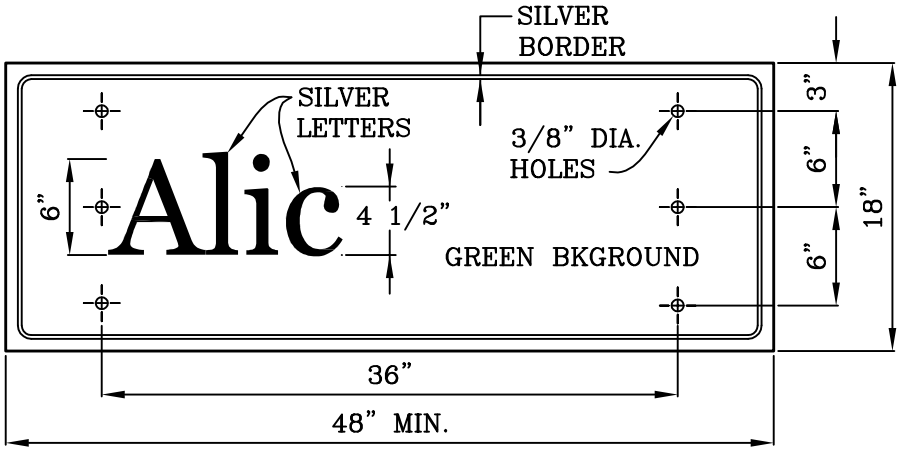

NOTES:

SIZE – MINIMUM LENGTH OF SIGN SHALL BE 48", WIDTH SHALL BE 18", THICKNESS SHALL BE 0.080" OR 0.063" WITH BACK FRAME.

MATERIAL:

SIGN SHALL BE 6061T6 OR 5155H36 ANODIZED ALUMINUM ALLOY EXTRUSION.

FINISH:

SIGN FACE SHALL BE OF WIDE ANGLE, SMOOTH SURFACE REFLECTIVE SHEETING, CONFORMING TO FEDERAL SPECIFICATION L–S–300A CLASSIFICATION 1.2 TYPE I (CLASS 1 OR 2) TABLE II REFLECTIVITY 1. LEGEND SHALL BE SILVER WITH REVERSE SCREEN GREEN BACKGROUND. SHEETING SHALL BE BONDED TO REFLECTIVE ALUMINUM ALLOY SIGN BLANKS AND BE OF THE SAME SHAPE AND SIZE.

LETTERING:

1. THE STREET NAMES SHALL BE COMBINATIONS OF 6" CAPITAL LETTERS AND 4 1/2" LOWER CASE LETTERS. ABBREVIATED SUFFIXES (I.E. BLVD, AVE, PKWY) SHALL BE SHOWN. THE STREET NAME SHALL BE CENTERED ON THE SIGN FACE. THE SIZE, STYLE, AND SPACING, OF THE LETTERS SHALL CONFORM TO THE CALIFORNIA DEPARTMENT OF TRANSPORTATION TRAFFIC MANUAL, CHAPTER 4, FOR A "G–7" ADVANCE STREET NAME SIGN.
2. 8" CAPITAL LETTERS AND 6" LOWER CASE LETTERS SHALL BE USED ON LARGER SIGNS IN CONFORMANCE WITH CALTRANS TRAFFIC MANUAL FOR RURAL ROADS WITH HIGH SPEED TRAFFIC. USE OF THIS SIGN SHALL BE AS DIRECTED BY THE CITY ENGINEER.
3. SPACING OF THE LETTERS SHALL BE AS FOLLOWS:
   a. THE END SPACING, SPACING BETWEEN WORDS OR NAMES WITH TWO OR MORE WORDS, AND SPACING BETWEEN STREET NAME AND SUFFIX SHALL NOT BE LESS THAN THE HEIGHT OF THE UPPER CASE LETTERING BEING USED.
   b. THE SPACING BETWEEN LETTERS SHALL BE 1 TO 1 1/2 TIMES THE STROKE WIDTH (WIDTH OF LETTERING MATERIAL), DEPENDENT ON COMBINATION OF LETTERS.

LOCATION

ADVANCE STREET NAME SIGNS PLACED IN MEDIANS SHALL BE 2' FROM THE EDGE OF THE TRAVELED WAY, AND BE LOCATED APPROXIMATELY 300' FROM THE INTERSECTION OR 100' FROM THE BEGINNING OF A LEFT TURN POCKET. SIGN MOUNTING HEIGHT SHALL BE 5' FROM ABOVE MEDIAN SURFACE AS DIRECTED BY ENGINEER. POSTS FOR ADVANCED STREET NAME SIGNS SHALL BE SQUARE PERFORATED STEEL TUBING 4" X 4" REDWOOD.

INSTALLATION:

SEE STD. PLAN 327 FOR PLACEMENT AND INSTALLATION.

CITY OF MISSION VIEJO

MISSION VIEJO CALIFORNIA 1988	ADVANCE STREET NAME SIGNS	STANDARD PLAN NO. 326
	Robert Henderson 9-23-03 APPROVED RCE 30190 DATE	SHT 1 OF 1

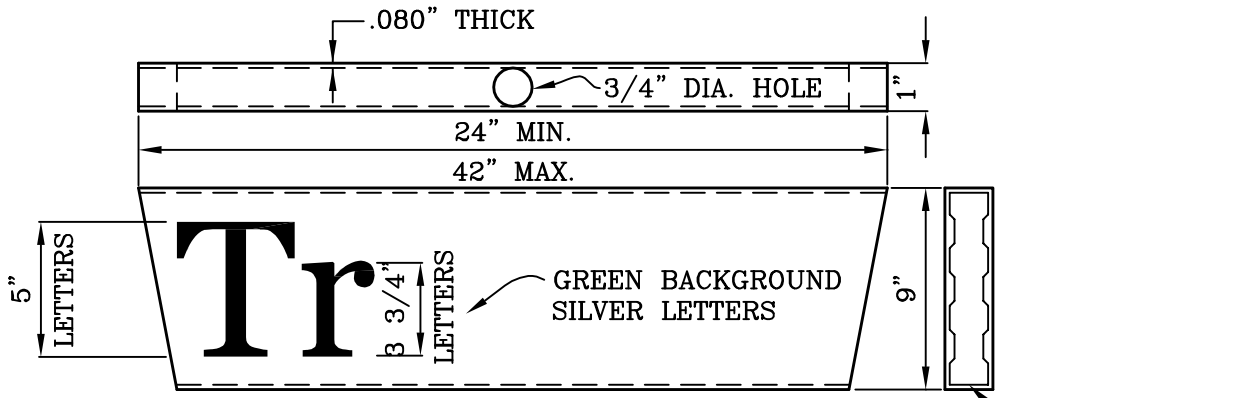

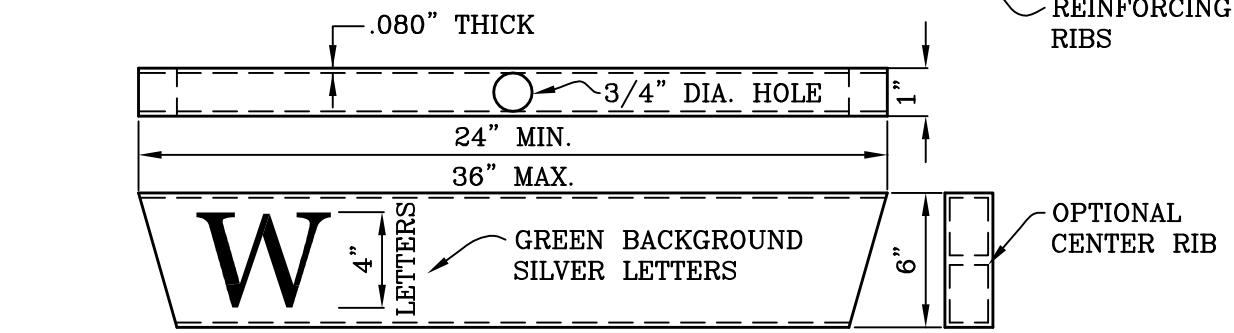

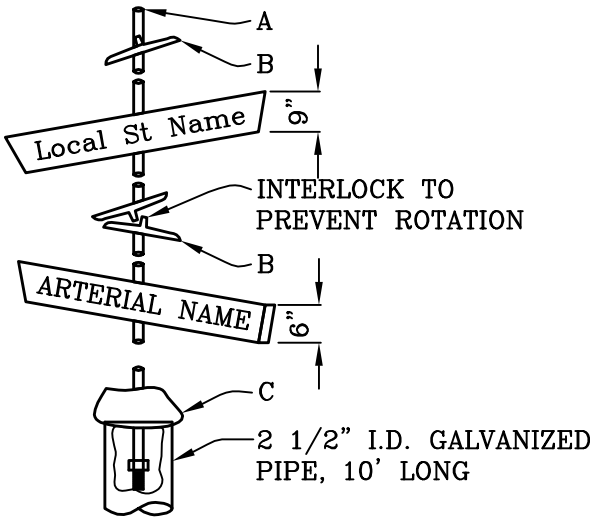

MOUNTING DETAIL

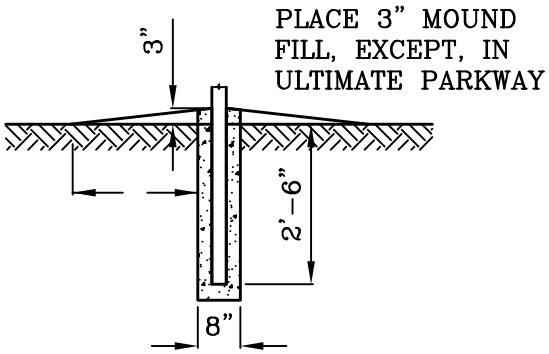

FOOTING DETAIL

SEE SHT. 2 AND 3 FOR NOTES

CITY OF MISSION VIEJO

STREET NAME SIGNS

STANDARD PLAN NO.

327

APPROVED RCE 30190 DATE 9-23-03

SHT 1 OF 4

NOTES:

1. EXACT LOCATIONS OF STREET NAME SIGNS ARE TO BE SHOWN ON STREET IMPROVEMENT PLANS. SEE SHEET 3 FOR PLACEMENT CRITERIA. SEE SHEET 3 FOR STREET NAME SIGN NOTES.

2. ALUMINUM ALLOY FOR ALL COMPONENTS SHALL CONFORM TO SPECIFICATIONS PUBLISHED BY THE ALUMINUM ASSOCIATION.

3. THE 9" SIGN SHALL FACE ARTERIAL TRAFFIC; THE 6" SIGN SHALL FACE LOCAL STREET TRAFFIC.

   A. USE A 5/8" x 18" CARRIAGE BOLT FOR 6" AND 9" SIGN COMBINATION. USE A 5/8" x 21" CARRIAGE BOLT FOR 9" AND 9" SIGN COMBINATION. CARRIAGE BOLT SHALL BE GALVANIZED MILD STEEL.

   B. ORNAMENTAL TOP AND CENTER ACROSS SADDLE SHALL BE ANODIZED AND CAST FORM ALUMINUM CASTING ALLOY 319.

   C. ANODIZED 2 1/2" POST CAP, CAST FROM ALUMINUM CASTING ALLOY 391, WITH THREE 3/8" STAINLESS STEEL SET SCREWS AND ONE 1/4" x 3/4" STEEL ROLL PIN.

SIZE:

THE SIGNS SHALL BE IN TWO SIZES:

1. FOR TRAFFIC ON LOCAL STREETS, THE LENGTH OF THE SIGN FACE SHALL BE IN SIX-INCH MULTIPLES FROM 24 TO 36 INCHES.

2. FOR TRAFFIC ON ARTERIAL STREETS, THE LENGTH OF THE SIGN FACE SHALL BE IN SIX-INCH MULTIPLES FROM 24 TO 42 INCHES. THE SIGN SHALL HAVE REINFORCING RIBS OR CROSS MEMBERS TO RETAIN THE RIGIDITY OF THE PIECES.

FINISH:

SIGN FACE SHALL BE OF WIDE ANGLE, SMOOTH SURFACE REFLECTIVE SHEETING, CONFORMING TO FEDERAL SPECIFICATION L-S-300A CLASSIFICATION 1.2 TYPE I (CLASS 1 OR 2) TABLE II REFLECTIVITY 1. LEGEND SHALL BE SILVER WITH REVERSE SCREEN GREEN BACKGROUND. SHEETING SHALL BE BOUNDED TO REFLECTIVE ALUMINUM ALLOY SIGN BLANKS AND BE OF THE SAME SHAPE AND SIZE.

CITY OF MISSION VIEJO

	SPECIAL PROVISIONS STREET NAME SIGNS	STANDARD PLAN NO. 327
	Roger Henderson 9-23-03 APPROVED RCE 30190 DATE	SHT 2 OF 4

LETTERING:

1. THE 6-INCH WIDTH SIGN SHALL HAVE 4-INCH CAPITAL LETTERS.

2. THE 9-INCH WIDTH SIGN SHALL HAVE 5-INCH CAPITAL LETTERS AND 3 3/4 INCH LOWER CASE LETTERS.

3. THE STREET NAME SHALL BE CENTERED ON THE SIGN FACE.

4. STREET NAME PREFIXES (SUCH AS CALLE, CAMINO) SHALL BE SHOWN IN 2-INCH CAPITAL LETTERS; STREET NAME SUFFIXES (SUCH AS DRIVE, STREET, ROAD), AND BLOCK NUMBERS SHALL NOT BE SHOWN.

5. SPACING OF THE LETTERS TO BE AS FOLLOWS:

   a. THE END SPACE SHALL NOT BE LESS THAN 1/3 THE HEIGHT OF THE UPPER CASE LETTER BEING USED.

   b. THE SPACING BETWEEN WORDS ON NAMES WITH TWO OR MORE WORDS SHALL NOT BE LESS THAN 2/3 THE HEIGHT OF THE UPPER CASE LETTER BEING USED.

   c. THE SPACING BETWEEN LETTERS SHALL BE 1 TO 1.5 TIMES THE STROKE WIDTH (WIDTH OF LETTERING MATERIAL), DEPENDENT UPON COMBINATION OF LETTERS.

CITY OF MISSION VIEJO

SPECIAL PROVISIONS
STREET NAME SIGNS

STANDARD PLAN NO.
327

Kevin Henderson 9-23-03

APPROVED RCE 30190 DATE

SHT 3 OF 4

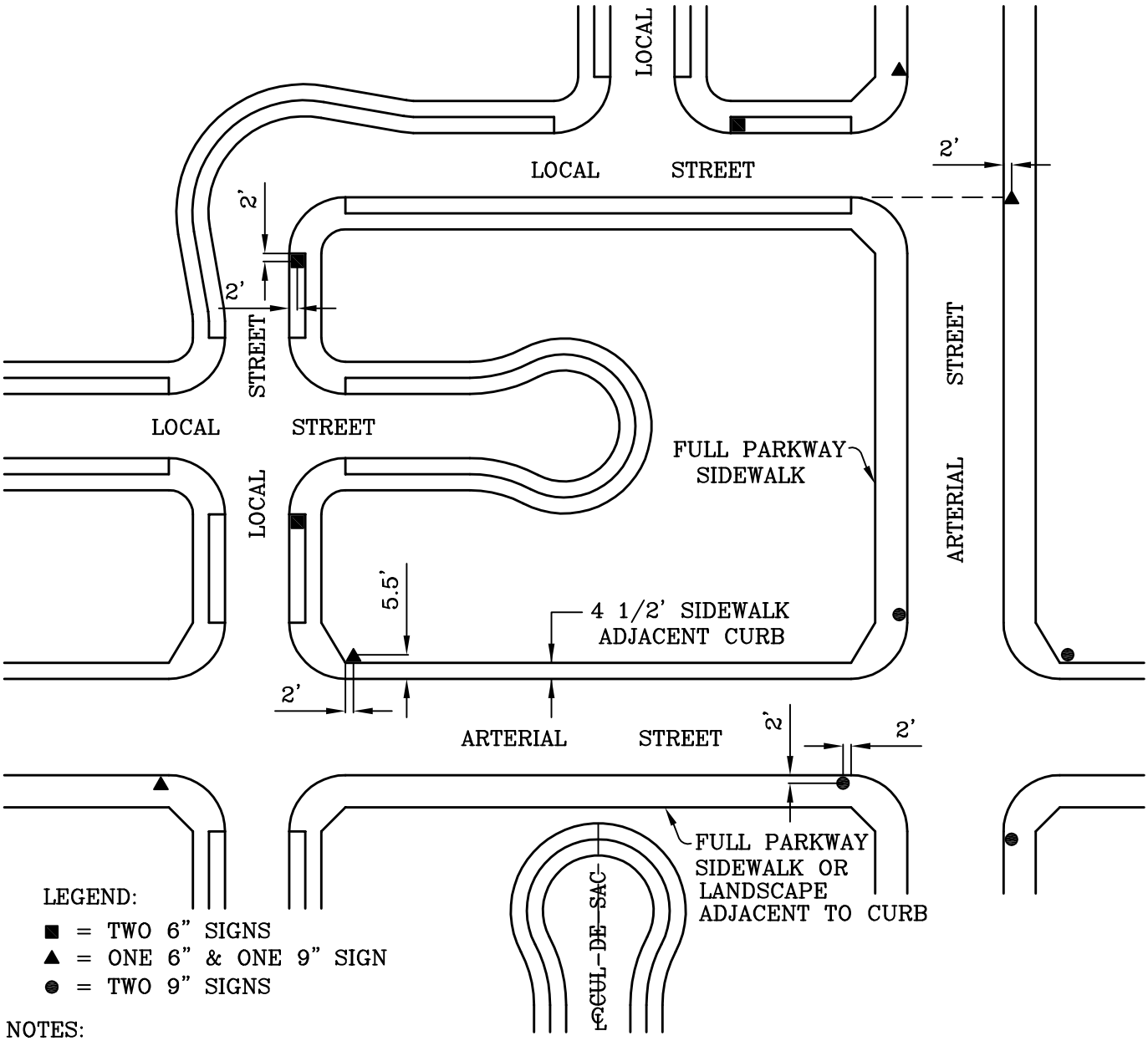

LEGEND:

■ = TWO 6" SIGNS
▲ = ONE 6" & ONE 9" SIGN
● = TWO 9" SIGNS

NOTES:

1. SEE SHTS. 1 & 2 FOR STREET NAME SIGN DETAILS AND NOTES.
2. THE 9" SIGN SHALL FACE ARTERIAL TRAFFIC; THE 6" SHALL FACE LOCAL STREET TRAFFIC.
3. STREET NAME SIGNS SHALL BE PLACED AT THE NEAR RIGHT APPROACH OF MAJOR TRAFFIC FLOW.
4. ONE SIGN SHALL BE PLACED AT THE INTERSECTION OF TWO LOCAL STREETS.
5. TWO SIGNS SHALL BE PLACED AT THE INTERSECTION OF AN ARTERIAL STREET WITH A LOCAL STREET.
6. FOUR SIGNS SHALL BE PLACED AT THE INTERSECTION OF TWO ARTERIAL STREETS.
7. STREET NAME SIGNS SHALL BE OMITTED AT SIGNALIZED INTERSECTIONS.

CITY OF MISSION VIEJO

STREET NAME SIGN LOCATION

STANDARD PLAN NO.

327

9-23-03

APPROVED RCE 30190 DATE

SHT 4 OF 4

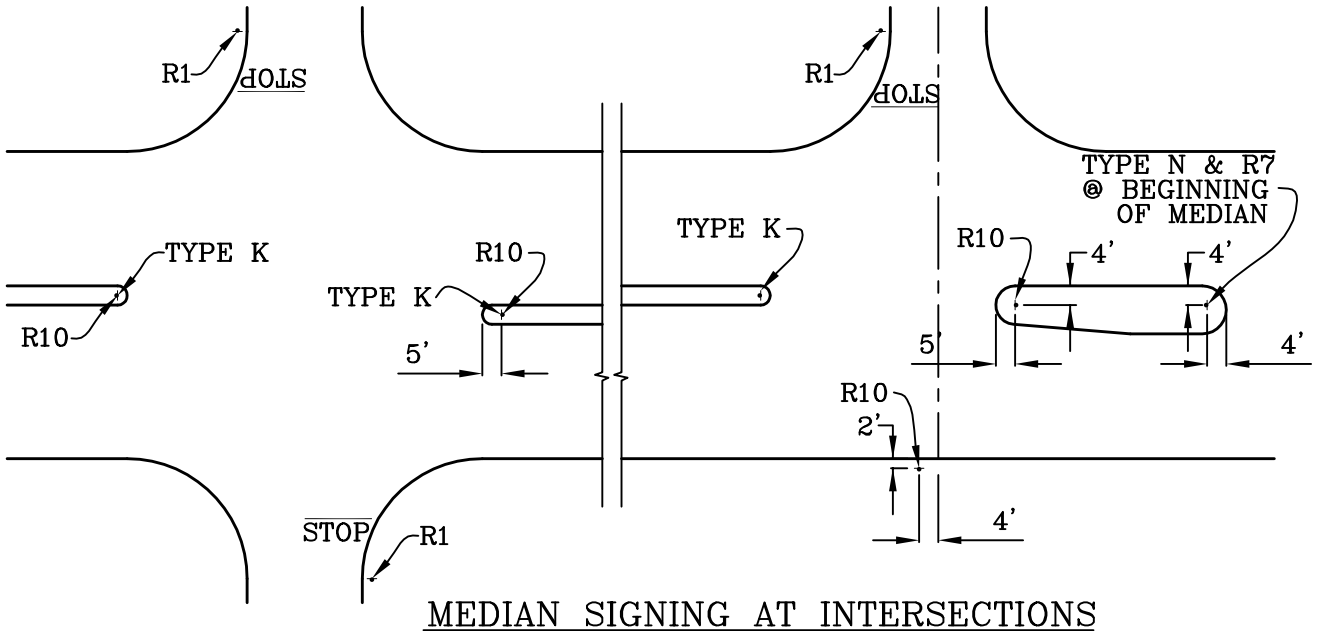

MEDIAN SIGNING AT INTERSECTIONS

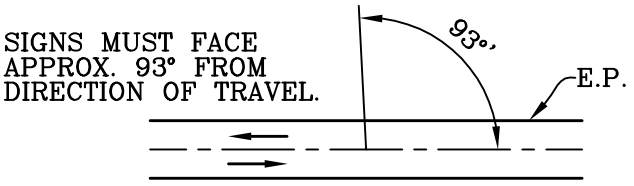

PLAN VIEW

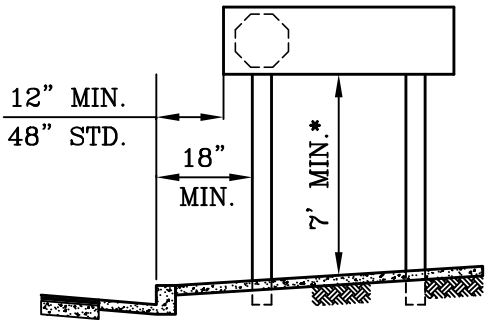

PARKWAY LOCATIONS

* 8' MIN. IF DESIGNATED BIKE TRAIL

SEE SHEET 2 FOR NOTES

CITY OF MISSION VIEJO

TRAFFIC SIGN PLACEMENT

STANDARD PLAN NO.

328

9-23-03

APPROVED RCE 30190 DATE

SHT 1 OF 2

NOTES:

1. SEE PARKWAY LOCATION DETAIL FOR STANDARD MOUNTING HEIGHT. EXCEPTIONS SHOULD BE MADE TO AVOID SIGHT RESTRICTIONS OR UNDESIRABLE CONDITIONS.

2. SEE THE LATEST STATE OF CALIFORNIA TRAFFIC MANUAL FOR R1, R7, R10, TYPE K, AND TYPE N DETAILS. SIGNS SHALL BE STANDARD SIZE UNLESS OTHERWISE NOTED. R1 AND TYPE N SIGNS SHALL BE FACED WITH HIGH INTENSITY, SUPER ENGINEERING, OR EQUIVALENT GRADE REFLECTIVE MATERIAL, MEETING STATE OF CALIFORNIA DEPARTMENT OF TRANSPORTATION STANDARD SPECIFICATIONS SECTION 718, REFLECTIVE SHEETING.

3. PARKWAY SIGNS HAVING A HORIZONTAL WIDTH OF 48" OR GREATER SHALL BE DUAL-POST MOUNTED. SIGNS LESS THAN 48" IN WIDTH SHALL BE MOUNTED ON A SINGLE POST. POST(S) SHALL BE SQUARE PERFORATED STEEL TUBING WITH BREAKAWAY BASE EXCEPT WHEN MOUNTED ON SAME POST AS STREET NAME SIGN. SEE PLAN VIEW FOR ANGULAR PLACEMENT OF SIGNS. SEE PLAN 325 FOR SQUARE PERFORATED STEEL TUBING DETAIL.

4. SIZING OF R1 ("STOP") SIGNS:
   30" -STANDARD SIZE INCLUDING RESIDENTIAL.
   36" -WHERE THE APPROACH WIDTH IS GREATER THAN 30' DUAL SIGNS SHALL BE USED WHERE THERE IS A RAISED MEDIAN AND APPROACH WIDTH IS GREATER THAN 30'.

5. BOTTOM OF R10 SIGNS SHALL BE 18" ABOVE E.P.

CITY OF MISSION VIEJO

MISSION VIEJO CALIFORNIA 1988	TRAFFIC SIGN PLACEMENT (NOTES)	STANDARD PLAN NO. 328
	Kevin Henderson 9-23-03 APPROVED RCE 30190 DATE	SHT 2 OF 2

STREET LIGHTING STANDARDS:

1. GENERAL:

SAFETY LIGHTING SHALL BE PROVIDED IN ACCORDANCE WITH THIS STD. PLAN AT INTERSECTIONS AND ALL OTHER LOCATIONS WHERE ILLUMINATION IS JUSTIFIED BY THE NEED FOR SIGHT DISTANCE, AS DETERMINED BY THE CITY ENGINEER.

ALL STREET LIGHT LAYOUTS AND LIGHTING DESIGNS SHALL BE APPROVED BY THE CITY ENGINEER PRIOR TO INSTALLATION.

FOR THE PURPOSES OF THIS PLAN, A COMMUTER STREET SHALL BY CONSIDERED TO BE A LOCAL STREET.

2. ELECTROLIERS:

ELECTROLIERS SHALL BE MARBELITE POLES UNLESS OTHERWISE APPROVED BY THE CITY ENGINEER.

ELECTROLIERS SHALL BE PLACED AT LOT LINES WHENEVER PRACTICAL.

AT INTERSECTIONS, ELECTROLIERS SHALL BE PLACED NEAR THE END OF THE CURB RETURN ON THE FAR RIGHT SIDE OF THE INTERSECTION. AT A "T" INTERSECTION, AN ELECTROLIER SHALL BE PLACED AT THE HEAD OF THE INTERSECTION OR LOCATED NEAR THE END OF CURB RETURN ON THE FAR RIGHT SIDE OF INTERSECTION.

ELECTROLIERS IN MEDIAN ISLANDS SHALL NOT BE PLACED CLOSER THAN 100 FEET FROM AN ARTERIAL HIGHWAY OR COLLECTOR STREET INTERSECTION. ELECTROLIERS SHALL NOT BE PLACED IN MEDIAN ISLANDS LESS THAN (6) FEET IN WIDTH.

ELECTROLIERS SHALL BE PLACED ALTERNATELY ON EACH SIDE OF THE ROADWAY WHEN INSTALLED ALONG THE SIDES OF A ROADWAY.
ELECTROLIERS SHALL BE SPACED IN ACCORDANCE WITH THE FOLLOWING:

LOCATION	MINIMUM HPSV LAMP SIZE (LUMENS)	ELECTROLIERS	SPACING (FEET)
A. INTERSECTION OF TWO LOCAL STREETS	5,800	1	N/A
B. T INTERSECTION OF LOCAL STREET WITH ARTERIAL HIGHWAY	22,000	1	N/A
C. FULL INTERSECTION OF LOCAL STREET WITH ARTERIAL	22,000	2	N/A
D. INTERSECTION OF TWO ARTERIAL HIGHWAYS	30,000	4	N/A

CITY OF MISSION VIEJO

STREET LIGHTING

STANDARD PLAN NO.

329

9-23-03

APPROVED RCE 30190 DATE

SHT 1 OF 3

LOCATION	MIN. HPSV LAMP SIZE	ELEC.	MIN. SPACING (FEET)
E. LOCAL STREETS	5,800	1	180
F. LOCAL STREET CUL-DE-SAC	5,800	1	N/A
G. SECONDARY HIGHWAY	16,000	1	180
H. PRIMARY HIGHWAY			
(WITH RAISED MEDIAN)	9,500 (DBL)	1	180
(WITHOUT RAISED MEDIAN)	16,000	1	180
I. MAJOR HIGHWAY			
(WITH RAISED MEDIAN)	9,500 (DBL)	1	180
(WITHOUT RAISED MEDIAN)	16,000	1	180

3. LUMINAIRES AND MAST ARMS:

MISSION BELL HEADS WITH SCROLLS AND BONNETS ARE REQUIRED.

LUMINAIRES AT SIGNALIZED INTERSECTIONS SHALL BE EQUIPPED WITH GLARE SHIELDS OR HAVE INTEGRAL CUTOFF FEATURES.

MOUNTING HEIGHT OF LUMINAIRES SHALL CONFORM TO THE FOLLOWING:
A. 30-FOOT MINIMUM FOR GREATER THAN 9,500 LUMENS.
B. 25-FOOT MINIMUM FOR 9,500 LUMENS OR LESS.

MINIMUM LENGTH OF MAST ARMS SHALL CONFORM TO THE FOLLOWING:
A. 6-FOOT MINIMUM.

4. LAMPS:

LAMPS SHALL BE HIGH PRESSURE SODIUM VAPOR (HPSV).

5. MISCELLANEOUS MATERIALS AND WORKMANSHIP:

MATERIALS AND WORK SHALL CONFORM TO OR EXCEED THE APPLICABLE REQUIREMENTS OF THE NATIONAL ELECTRIC CODE, THE ELECTRICAL SAFETY ORDERS OF THE DEPARTMENT OF INDUSTRIAL SAFETY, STATE OF CALIFORNIA, AND THE AMERICAN SOCIETY FOR TESTING MATERIALS.

IN ADDITION TO THE ABOVE, NON-UTILITY-OWNED STREET LIGHTING INSTALLATIONS SHALL CONFORM TO THE LATEST PUBLICATION OF SECTION 307 OF THE STANDARD SPECIFICATIONS FOR PUBLIC WORKS CONSTRUCTION ("GREEN BOOK") AND THIS STANDARD PLAN.

CITY OF MISSION VIEJO

STREET LIGHTING

STANDARD PLAN NO.

329

Kevin Henderson 9-23-03

APPROVED RCE 30190 DATE

SHT 2 OF 3

THE CONSTRUCTION PRACTICES AND MATERIALS USED FOR STREET LIGHTS OWNED BY UTILITIES SUBJECT TO THE REGULATION OF THE CALIFORNIA PUBLIC UTILITIES COMMISSION ARE SPECIFIED EXCLUSIVELY BY THE ORDERS OF THE COMMISSION. ALL STREET LIGHTS OWNED BY REGULATED UTILITIES SHALL CONFORM TO OR EXCEED THE REQUIREMENTS OF GENERAL ORDERS 95 AND 128.

6. SERVICE AND MAINTENANCE

SERVICES AND MAINTENANCE SHALL BE THE RESPONSIBILITY OF THE OWNER OF THE LIGHTING FACILITY.

DESIGN CRITERIA ILLUMINATION LEVEL

1. GENERAL:

REQUIRED SPACING AND LUMEN LEVELS MAY BE MODIFIED ON AN EXCEPTIONAL BASIS FOR PURPOSES OF CRIME PREVENTION OR ENERGY SAVINGS. ALL MODIFICATIONS SHALL MEET THE LIGHTING LEVELS SPECIFIED BELOW AND SHALL BE SUPPORTED BY ADEQUATE CALCULATIONS APPROVED BY THE CITY ENGINEER. CONSISTENCY OF ELECTROLIER SPACING AND LAMP LUMEN LEVELS SHALL BE MAINTAINED ALONG ALL HIGHWAYS WHENEVER POSSIBLE.

LIGHTING LEVELS SHALL BE IN ACCORDANCE WITH THE FOLLOWING:

2. ARTERIAL HIGHWAYS:

DESCRIPTION	AVERAGE HORIZONTAL FOOTCANDLES
ARTERIAL HIGHWAYS	0.40
SIDEWALKS (ROADSIDE)	0.25
ON-ROAD BIKEWAYS (MARKED)	0.25
OFF-ROAD WALKWAYS AND BIKE PATHS	0.25
PEDESTRIAN TUNNELS	4.0
PEDESTRIAN OVERPASS	0.3
PEDESTRIAN STAIRWAYS	0.6

3. LOCAL STREETS:

ELECTROLIERS SHALL BE SPACED ACCORDING TO THE CRITERIA SPECIFIED IN "ELECTROLIER" SECTION. THE SPACING MAY BE MODIFIED ON AN EXCEPTIONAL BASIS FOR PURPOSES IF CRIME PREVENTION, BUT THE AVERAGE LIGHTING LEVEL SHALL NOT EXCEED 0.25 HORIZONTAL FOOTCANDLES.

4. UNIFORMITY:

THE ILLUMINATION LEVELS IN THE ABOVE TABLE ARE MINIMUMS AND PROVIDE EFFECTIVE VISIBILITY ONLY WHEN COMBINED WITH UNIFORMITY OF ILLUMINATION. UNIFORMITY MAY BE EXPRESSED IN SEVERAL WAYS. THE AVERAGE LEVEL-TO-MINIMUM POINT METHOD USES THE AVERAGE ILLUMINATION OF THE ROADWAY DESIGN AREA BETWEEN TWO ADJACENT LUMINAIRES DIVIDED BY THE LOWEST VALUE AT ANY POINT IN THE AREA EXCEPT ON LOCAL STREETS. UNDER THIS METHOD, THE AVERAGE-TO-MINIMUM RATIO SHALL NOT EXCEED 6 TO 1.

CITY OF MISSION VIEJO

MISSION VIEJO CALIFORNIA 1988

STREET LIGHTING

STANDARD PLAN NO.

329

Robert Henderson 9-23-03

APPROVED RCE 30190 DATE

SHT 3 OF 3

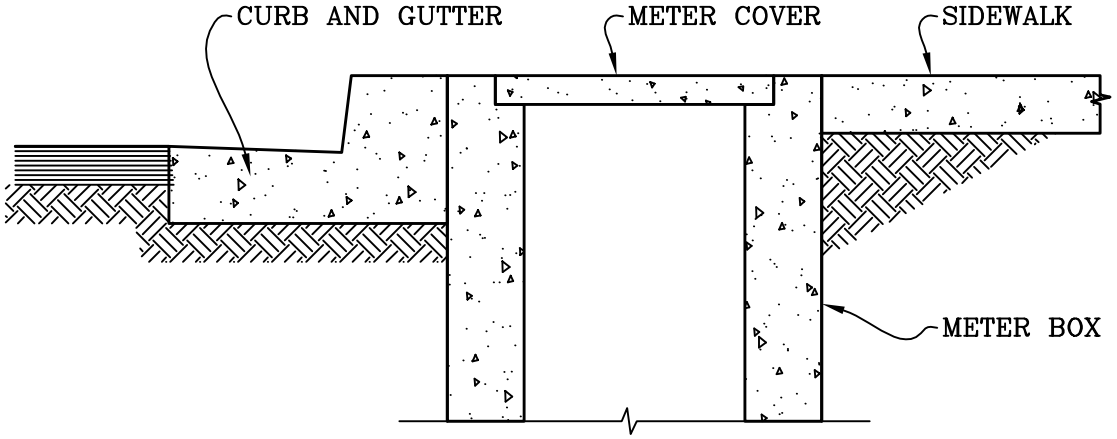

METER BOX DETAIL

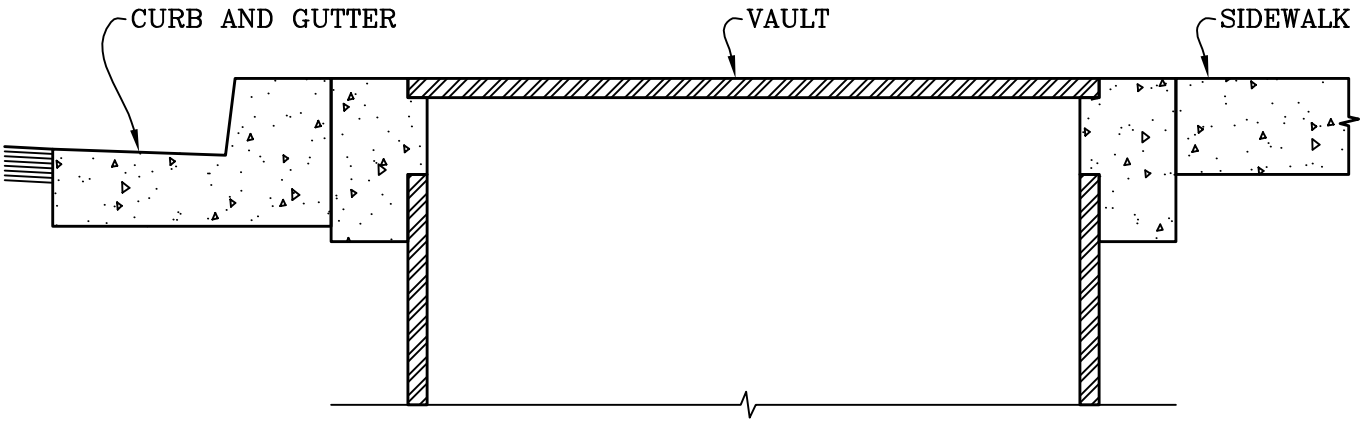

VAULT DETAIL

NOTES:

1. METER BOXES AND UTILITY VAULTS IN SIDEWALKS SHALL BE PERPENDICULAR TO AND ADJACENT WITH THE BACK OF CURB, AND SHALL BE FLUSH WITH TOP OF SIDEWALK.

2. WITHIN THE SIDEWALK AREA, METER BOXES SHALL HAVE A BOLT DOWN CONCRETE COVER AND UTILITY VAULTS SHALL HAVE A BOLT DOWN DIAMOND PLATE COVER. COVER SHALL BE BOLTED DOWN WITH 5 SIDED BOLTS. TOP OF BOLTS SHALL BE FLUSH WITH TOP OF COVER.

CITY OF MISSION VIEJO

METER & VAULT COVER DETAIL

STANDARD PLAN NO.

330

Kevin Henderson 9-23-03

APPROVED RCE 30190 DATE

SHT 1 OF 1

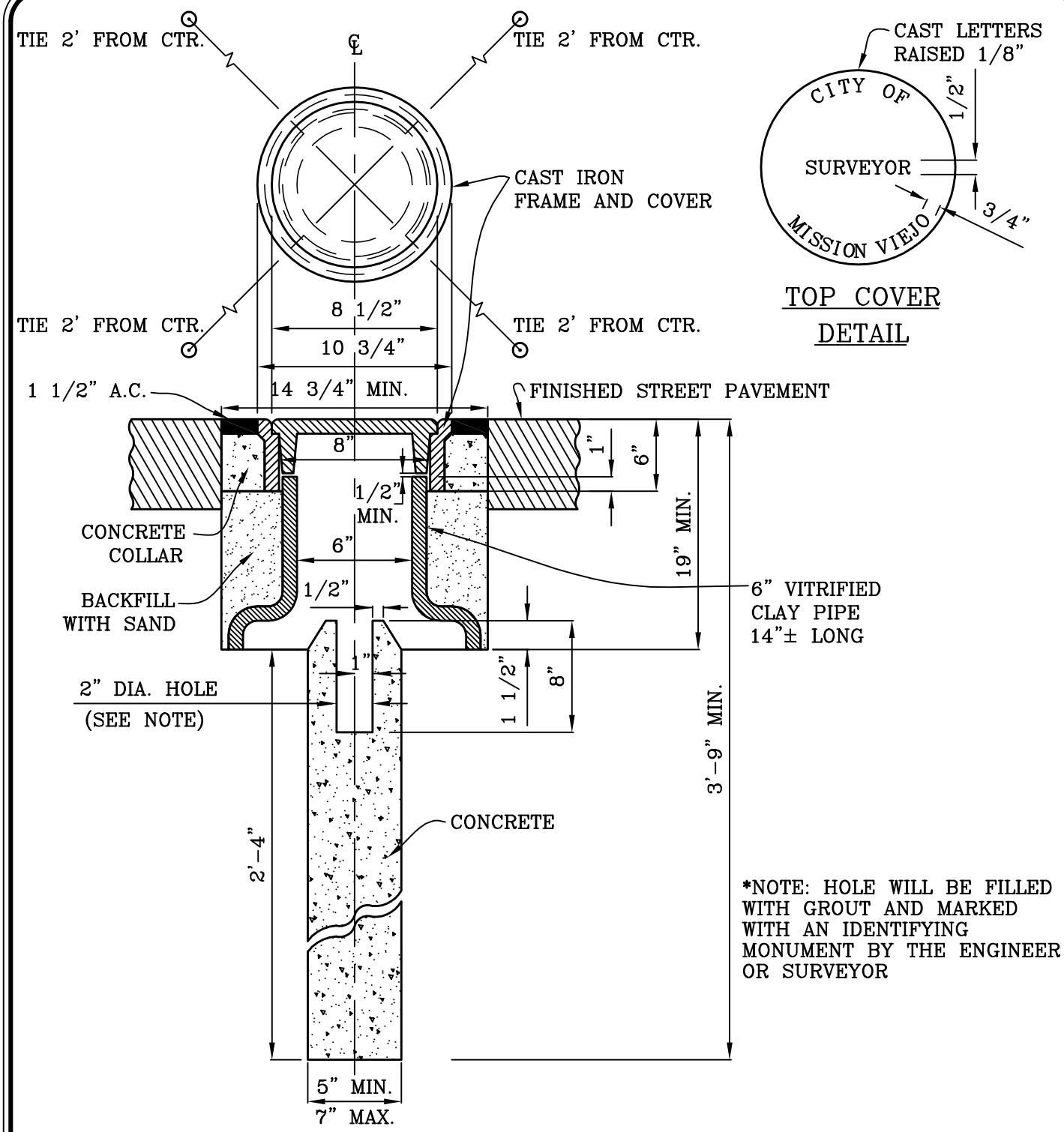

*NOTE: HOLE WILL BE FILLED WITH GROUT AND MARKED WITH AN IDENTIFYING MONUMENT BY THE ENGINEER OR SURVEYOR

CITY OF MISSION VIEJO

SURVEY MONUMENT (TYPE A)

STANDARD PLAN NO.

341

APPROVED | RCE 30190 | DATE 9-23-03

SHT 1 OF 1

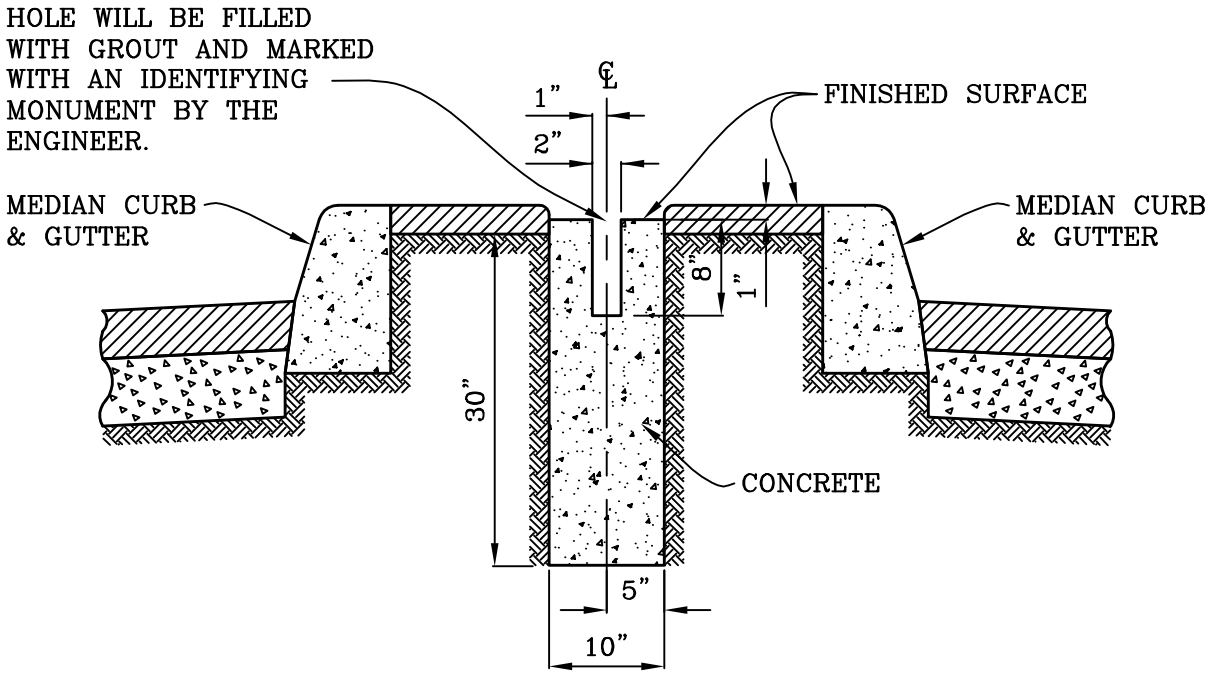

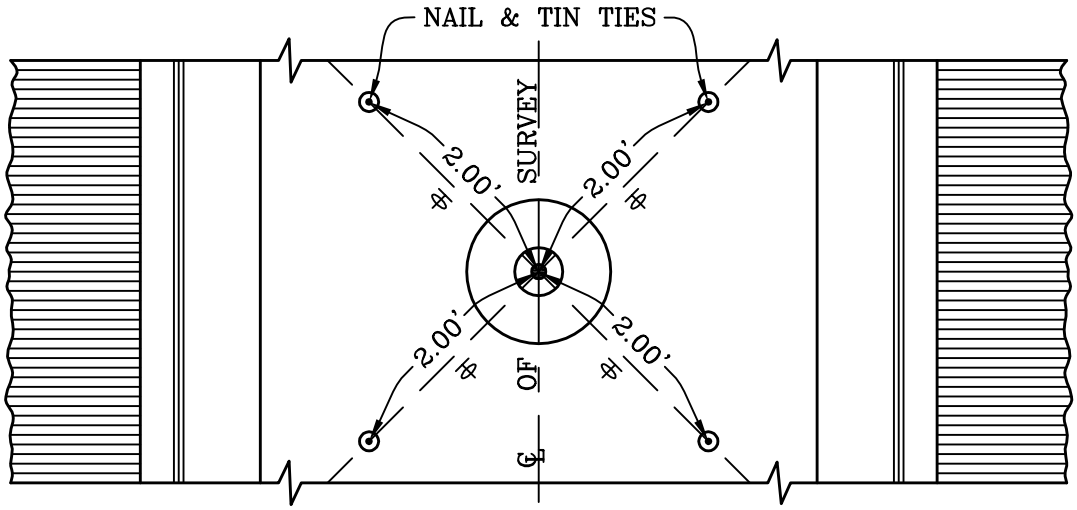

THIS TYPE OF MARKER TO BE INSTALLED ONLY IN SITUATIONS WHERE NO VEHICULAR TRAFFIC IS ANTICIPATED.

CITY OF MISSION VIEJO

SURVEY MONUMENT (TYPE B)

STANDARD PLAN NO.

342

9-23-03

APPROVED RCE 30190 DATE

SHT 1 OF 1

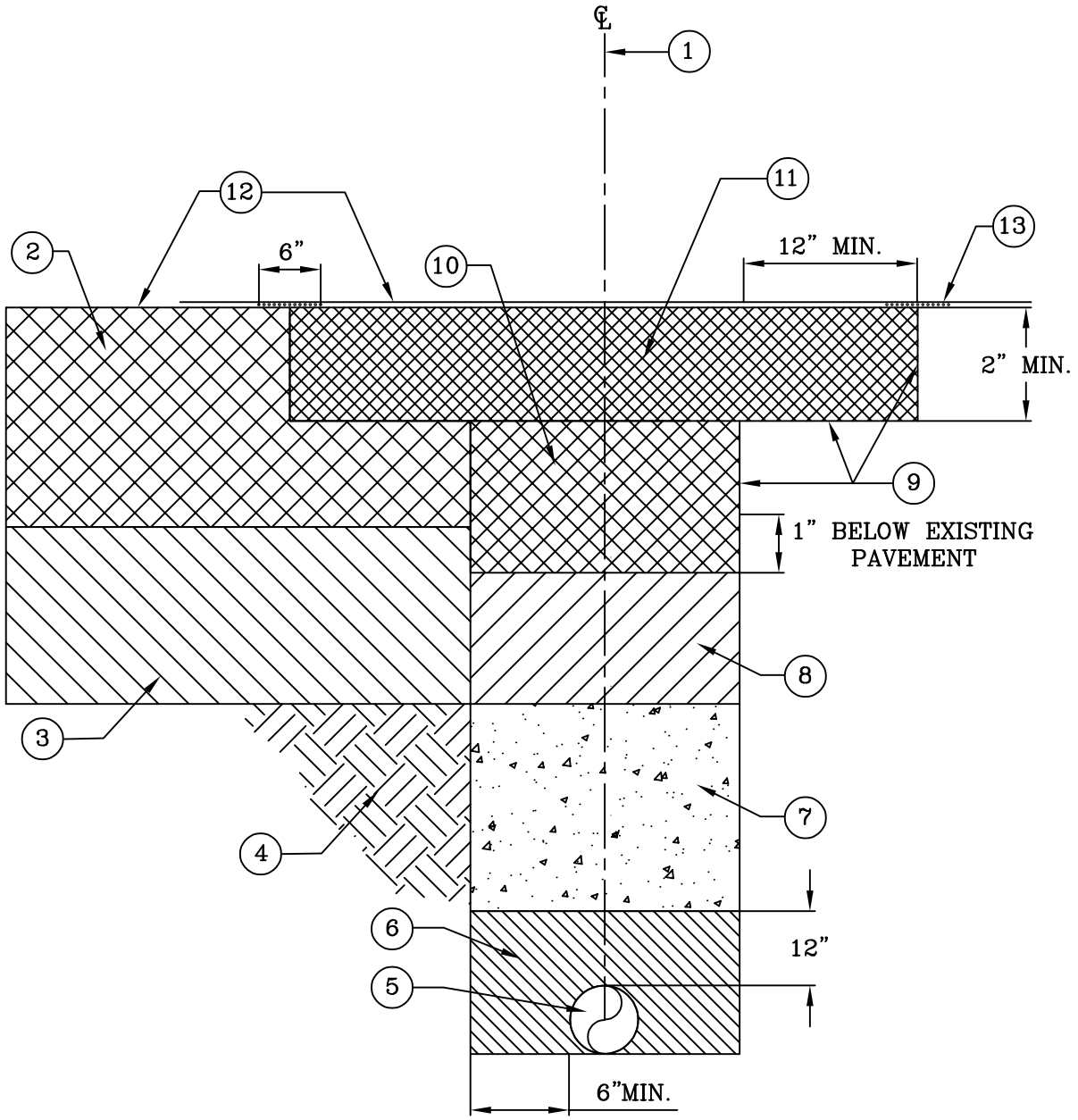

SECTION
N.T.S.

CITY OF MISSION VIEJO

TRENCH T-CAP

STANDARD PLAN NO.

343

02/01/22

APPROVED BY: CITY ENGINEER RCE 51160 DATE

SHT 1 OF 2

1. TRENCH CENTERLINE.
2. EXISTING A.C. PAVEMENT.
3. EXISTING BASE MATERIAL.
4. UNDISTURBED SOIL.
5. CONDUIT, PIPE, ETC.
6. MORTAR SAND BEDDING/SHADING COMPACTED TO 95% RELATIVE DENSITY.
7. TWO SACK CEMENT SLURRY BACKFILL. ALLOW A MINIMUM 24 HOURS CURE BEFORE ASPHALT PAVING. ALTERNATIVELY, NATIVE BACKFILL MAY BE USED IF COMPACTED TO 95% RELATIVE DENSITY AND APPROVED BY THE CITY ENGINEER.
8. UNTREATED BASE MATERIALS SHALL BE CRUSHED AGGREGATE BASE PER SECTION 200-2.2.1 OF THE "GREENBOOK."
9. GRADE SS-1h EMULSIFIED ASPHALT APPLIED AT 0.05 GALLON PER SQUARE YARD.
10. ASPHALT PAVING BASE COURSE SHALL BE B2 PG-64-10.
11. ASPHALT PAVING SURFACE SHALL BE C3 PG-64-10.
12. EXISTING ASPHALT PAVEMENT FINISHED GRADE. SMOOTHNESS AND COMPACTION OF RESURFACING SHALL MEET THE REQUIREMENTS OF SEC. 302-5.6.2 OF THE "GREENBOOK" EXCEPT THAT THE SMOOTHNESS SHALL BE DETERMINED OVER THE LENGTH AND WIDTH OF THE PAVEMENT AREAS DISTURBED BY THE CONTRACTOR'S/PERMITTEE'S OPERATION.
13. APPLY GRADE SS-1h EMULSIFIED ASPHALT APPLIED AT 0.05 GALLON PER SQUARE YARD 6 INCHES WIDE CENTERED ON THE EDGE OF THE GRIND LINE AFTER SURFACE COURSE PAVEMENT.

ADDITIONAL NOTES:

A. FINAL SURFACE COURSE PAVEMENT TO MATCH EXISTING PAVEMENT (E.G. SLURRY SEAL, RUBBERIZED ASPHALT, ETC.).

B. WHEN THE EDGE OF THE EXCAVATION IS WITHIN 42 INCHES OF THE EDGE OF PAVEMENT OR ANY PAVING JOIN LINE, REMOVE ALL PAVEMENT BETWEEN THE EXCAVATION AND THE GUTTER OR STRUCTURE AND PAVE CONTINUOUS WITH THE BASE COURSE TRENCH PAVING.

C. WHEN THE EDGE OF THE GRIND LINE IS WITHIN 42 INCHES OF THE EDGE OF PAVEMENT, ANY STRUCTURE, ADJACENT TRENCH PATCH OR ANY OTHER PAVING JOIN LINE, THE 2 INCH DEEP GRIND SHALL BE EXTENDED TO THE EXISTING STRUCTURE OR JOIN LINE.

D. RADIUS AND IRREGULAR TRENCHES SHALL BE APPROVED BY THE CITY ENGINEER PRIOR TO EXCAVATION. SURFACE RESTORATION SHALL BE SQUARED OFF AND MADE UNIFORM AS DETERMINED BY THE CITY ENGINEER.

E. TRENCHES ON ARTERIAL STREETS SHALL INCLUDE FULL LANE RESTORATION.

F. UTILITIES SHALL BE AT A MINIMUM DEPTH OF 24" FROM THE ROADWAY FINISHED SURFACE UNLESS WAIVED BY THE CITY ENGINEER.

CITY OF MISSION VIEJO

MISSION VIEJO CALIFORNIA	TRENCH BACKFILL & ASPHALT CONCRETE RESURFACING	STANDARD PLAN NO. 343
	APPROVED BY: CITY ENGINEER RCE 51160 — DATE 02/01/22	SHT 2 OF 2

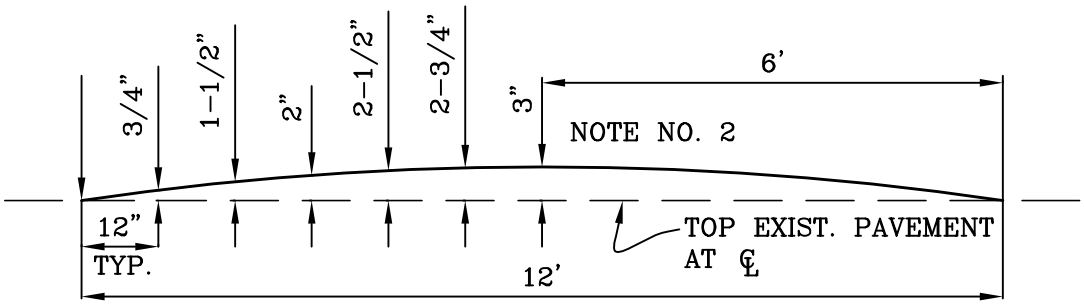

SECTION A–A

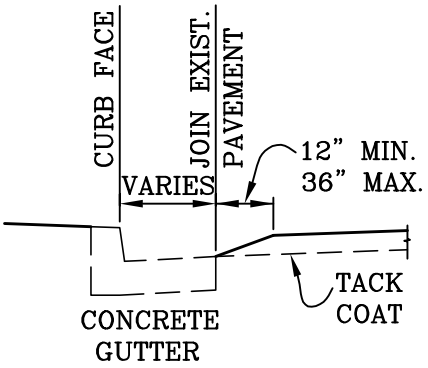

SECTION B–B

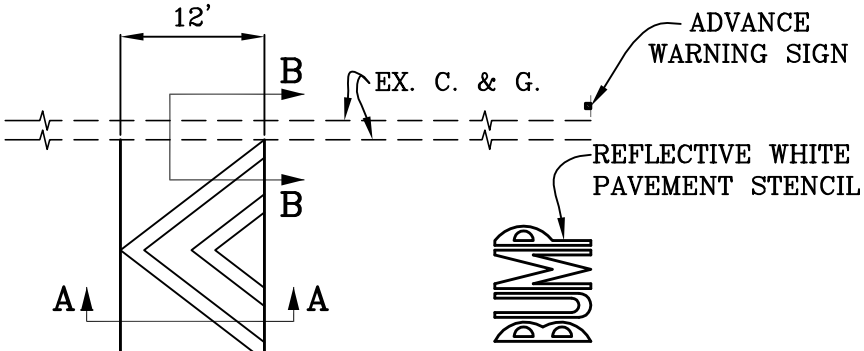

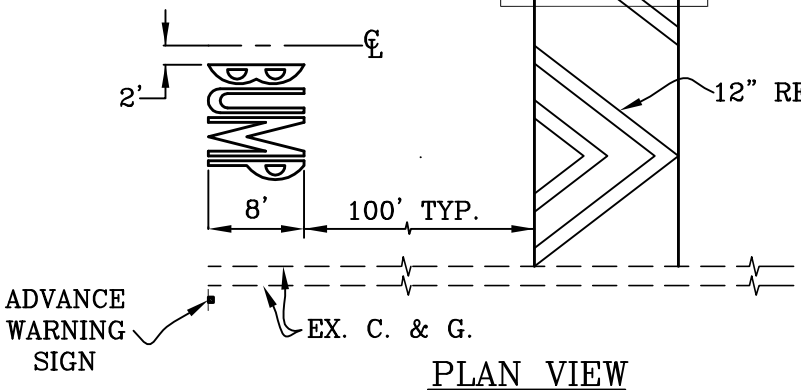

PLAN VIEW

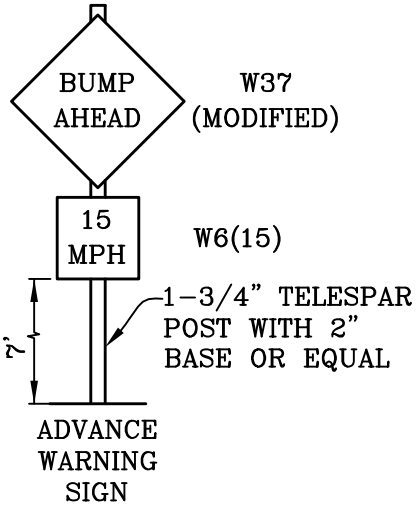

NOTES:

1. SPEED HUMPS SHALL BE LOCATED BY THE ENGINEER, AND/OR AS SHOWN ON PLAN.
2. SPEED HUMP SHALL BE CONSTRUCTED TO A HEIGHT OF 3" PLUS OR MINUS 1/4" AT THE MIDPOINT. THE CORRESPONDING SHAPE SHALL FOLLOW A CIRCULAR ARC (SEE SECTION A–A).
3. ASPHALT SHALL BE PLACED IN 2 LIFTS. 1" MINIMUM AT HIGHEST POINT.
4. ASPHALT SHALL BE TYPE III–C3–AR4000 (1/2") WITH 6% ASPHALT BINDER OR AS DIRECTED BY THE ENGINEER.

CITY OF MISSION VIEJO

SPEED HUMP

STANDARD PLAN NO.

345

9-23-03

APPROVED RCE 30190 DATE

SHT 1 OF 1

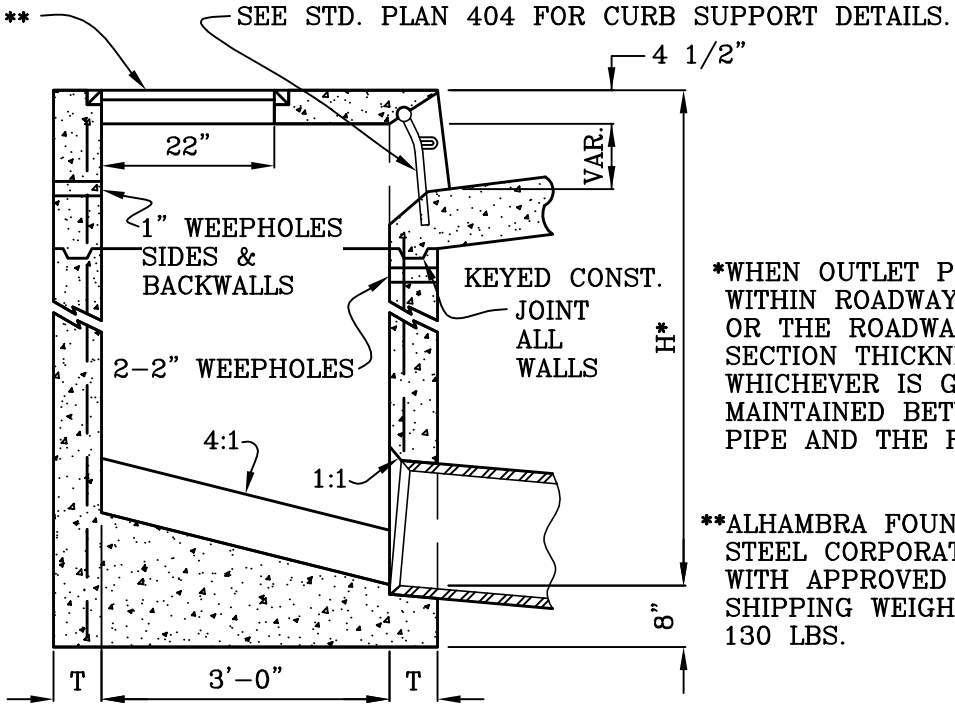

SECTION E-E

H	T
8'-0" OR LESS	6"
8'-1" TO 20'-0"	8"

*WHEN OUTLET PIPE IS CONSTRUCTED WITHIN ROADWAY, A MINIMUM OF 30" OR THE ROADWAY STRUCTURAL SECTION THICKNESS PLUS 6", WHICHEVER IS GREATER, SHALL BE MAINTAINED BETWEEN THE TOP OF PIPE AND THE ROADWAY SURFACE.

**ALHAMBRA FOUNDRY A-1531-B, APEX STEEL CORPORATION X100B OR EQUAL WITH APPROVED LOCKING DEVICES. SHIPPING WEIGHT (FRAME & COVER) = 130 LBS.

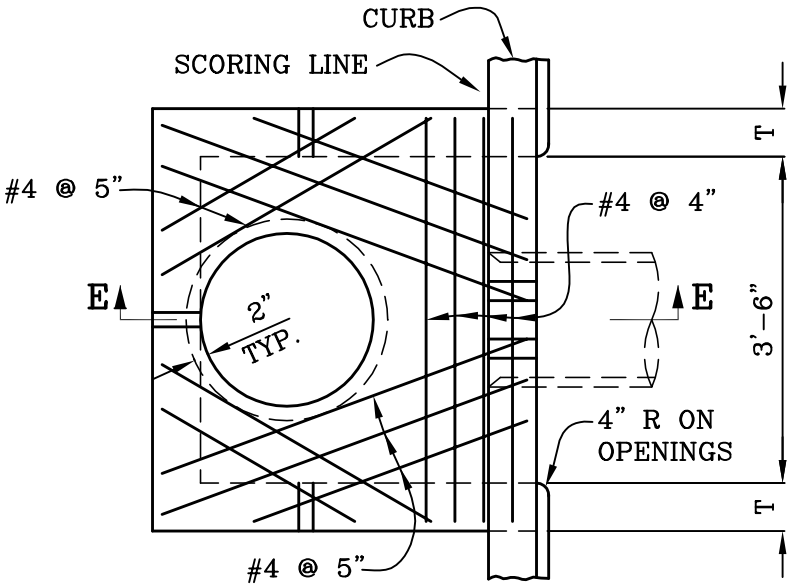

PLAN

NOTES:
1. CURB OPENING SHALL CONFORM TO CURB ALIGNMENT.
2. SEE STD. PLAN 404 FOR DETAILS AND NOTES.
3. SEE STD. PLAN 406 FOR LOCAL DEPRESSION DETAILS.

CITY OF MISSION VIEJO

INLET TYPE I

STANDARD PLAN NO.

401

APPROVED RCE 30190 DATE 9-23-03

SHT 1 OF 1

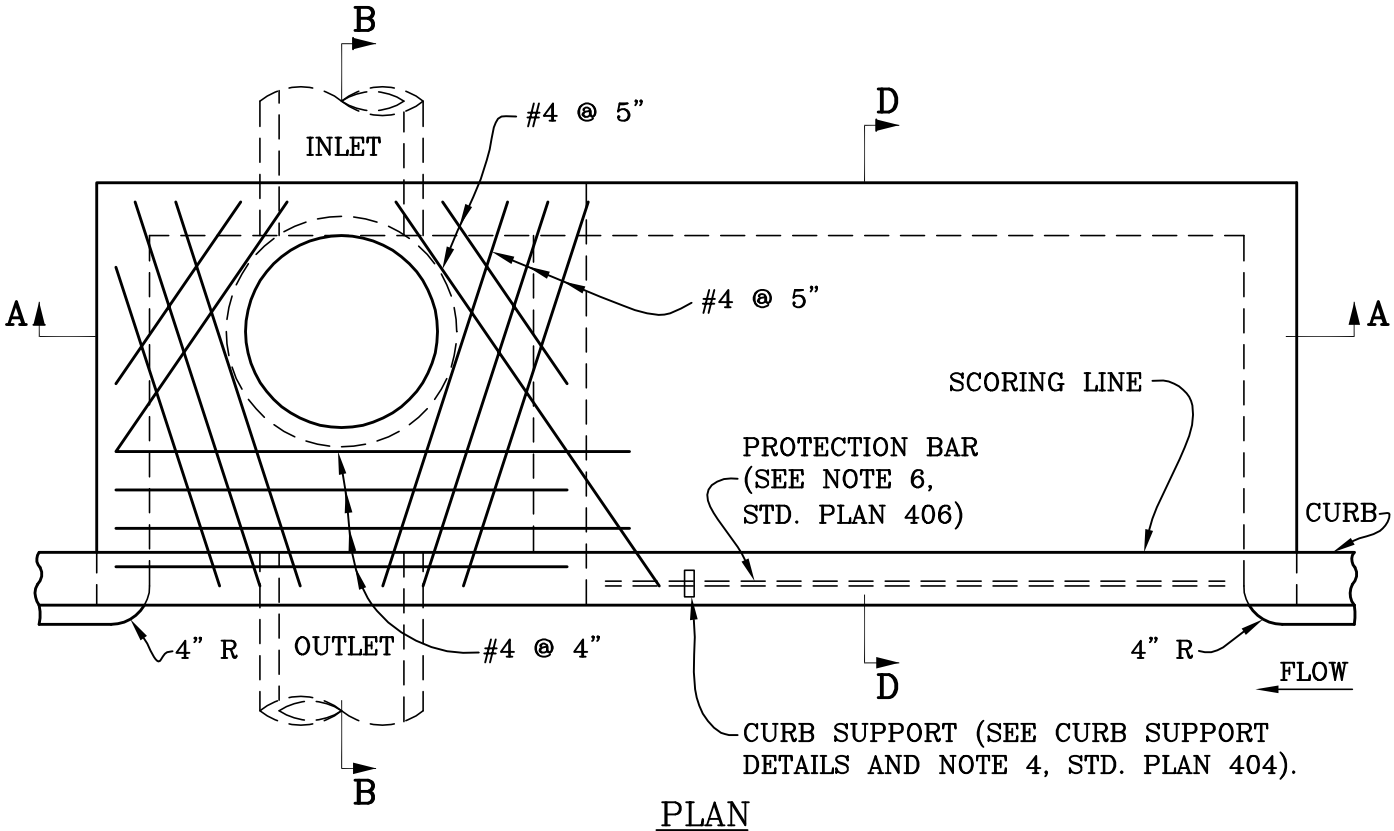

PLAN

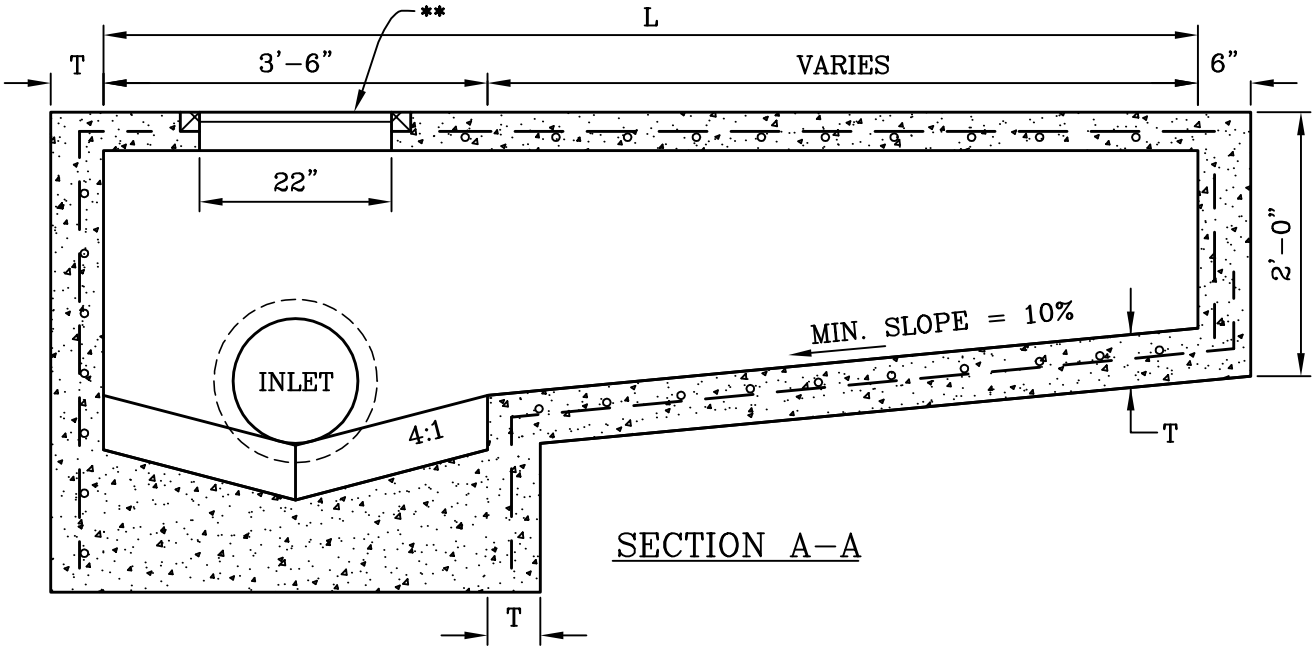

SECTION A–A

CITY OF MISSION VIEJO

MISSION VIEJO CALIFORNIA	INLET TYPE II	STANDARD PLAN NO. 402
	Robert Henderson 9-23-03 APPROVED RCE 30190 DATE	SHT 1 OF 2

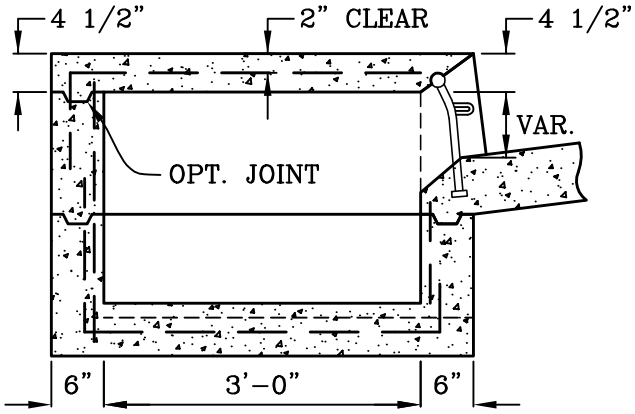

SECTION D-D

NOTES:

1. STANDARD OPENING LENGTHS "L" ARE 7', 10', 14', AND 21'. OTHER LENGTHS MAY BE USED, BUT NOT TO EXCEED 21'.
2. ALL REINFORCEMENT IS #4 @ 12" O.C. UNLESS OTHERWISE SPECIFIED.
3. CURB OPENING SHALL CONFORM TO CURB ALIGNMENT.
4. SEE STD. PLAN 404 FOR DETAILS AND NOTES.
5. SEE STD. PLAN 406 FOR LOCAL DEPRESSION DETAILS.

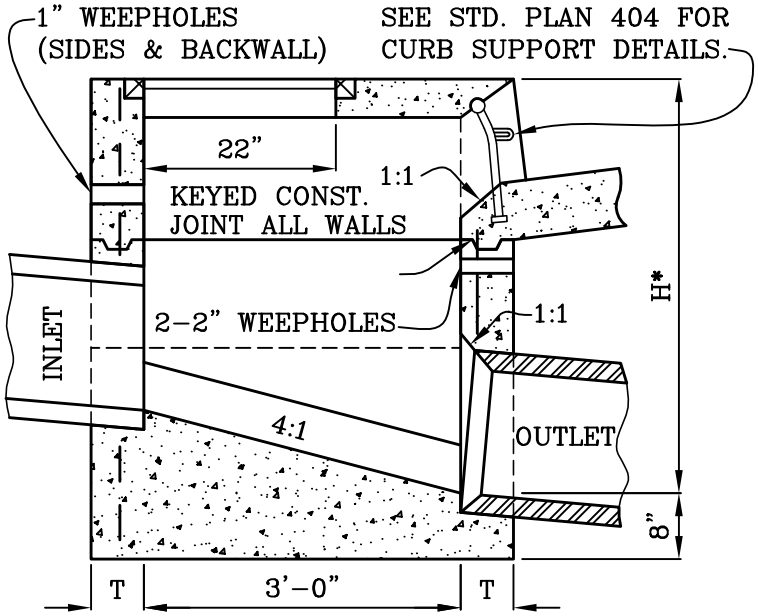

SECTION B-B

H	T	L	MIN. H
8'-0" OR LESS	6"	7'	3.54'
		10'	3.84'
8'-0" TO 20'-0"	8"	14'	4.24'
		21'	4.94'

**ALHAMBRA FOUNDRY A-1531-B, APEX STEEL CORPORATION X110B OR EQUAL WITH APPROVED LOCKING DEVICES. SHIPPING WEIGHT (FRAME & COVER) = 130 LBS.

*WHEN OUTLET PIPE IS CONSTRUCTED WITHIN ROADWAY, A MINIMUM OF 30" OR THE ROADWAY STRUCTURAL SECTION THICKNESS PLUS 6", WHICHEVER IS GREATER, SHALL BE MAINTAINED BETWEEN THE TOP OF PIPE AND THE ROADWAY SURFACE.

CITY OF MISSION VIEJO

INLET TYPE II

STANDARD PLAN NO.

402

9-23-03

APPROVED RCE 30190 DATE

SHT 2 OF 2

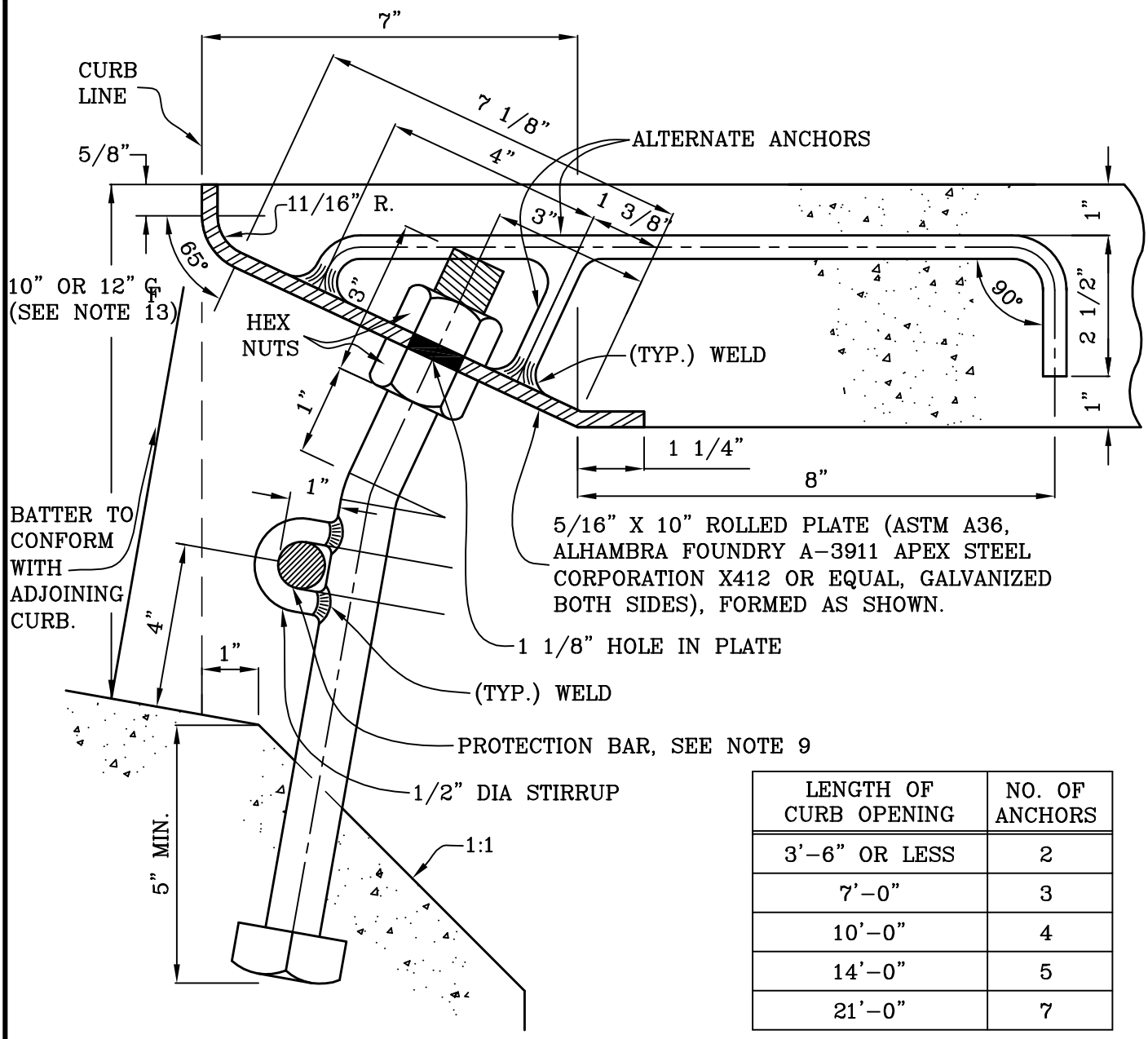

LENGTH OF CURB OPENING	NO. OF ANCHORS
3'-6" OR LESS	2
7'-0"	3
10'-0"	4
14'-0"	5
21'-0"	7

FACE PLATE ANCHORAGE
AND CURB SUPPORT DETAIL

(SEE SHEET 5 FOR NOTES)

CITY OF MISSION VIEJO

MISCELLANEOUS CURB INLET DETAILS AND NOTES

STANDARD PLAN NO.

404

9-23-03

APPROVED RCE 30190 DATE

SHT 1 OF 5

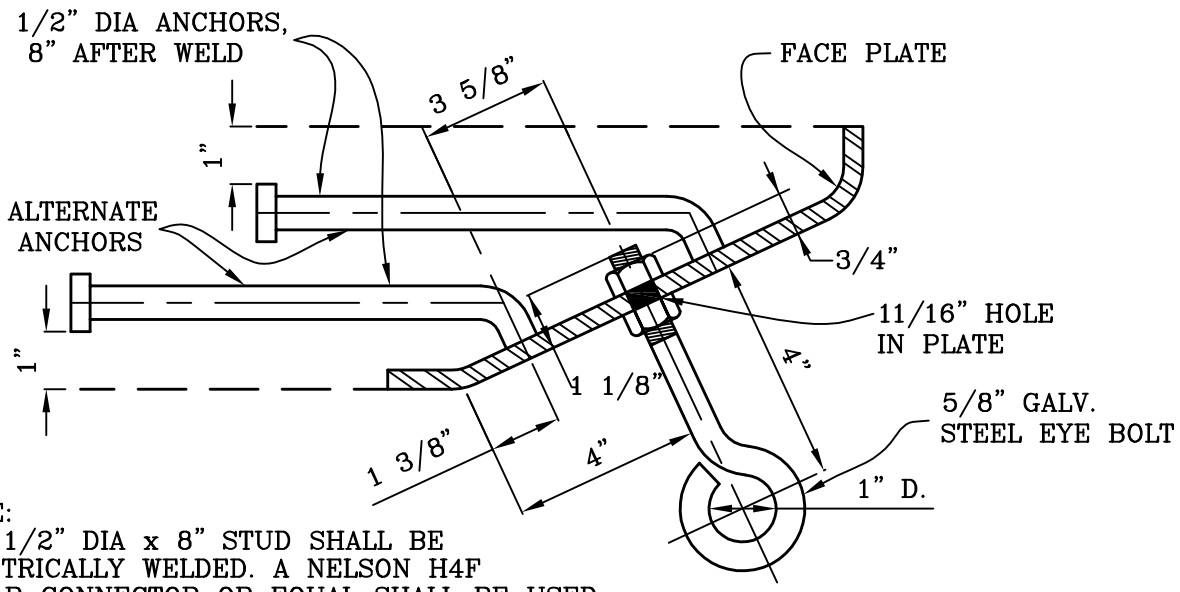

NOTE:
THE 1/2" DIA x 8" STUD SHALL BE ELECTRICALLY WELDED. A NELSON H4F SHEAR CONNECTOR OR EQUAL SHALL BE USED.

EYE BOLT AND ALTERNATE
ANCHOR DETAIL FOR FACE PLACE

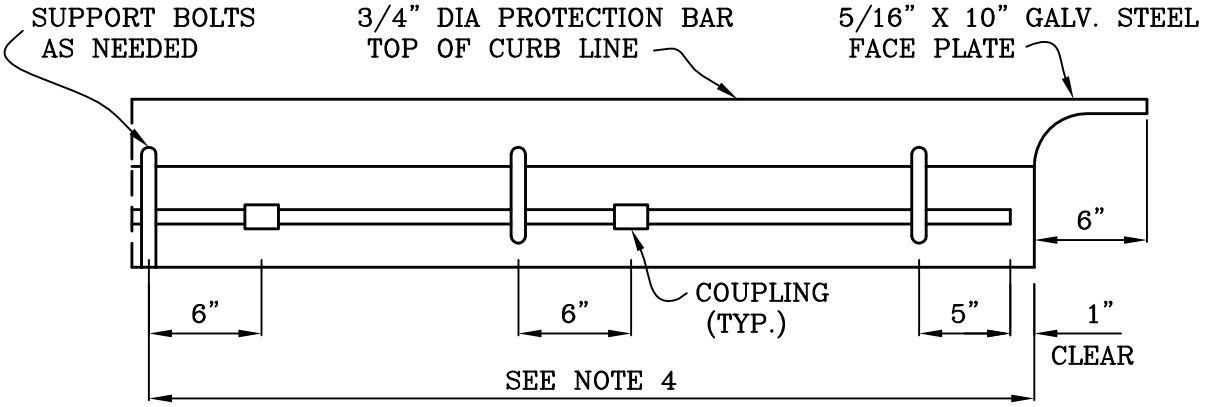

PROTECTION BAR DETAIL

(SEE SHEET 5 FOR NOTES)

CITY OF MISSION VIEJO

MISCELLANEOUS CURB INLET
DETAILS AND NOTES

STANDARD
PLAN NO.
404

9-23-03

APPROVED RCE 30190 DATE

SHT 2 OF 5

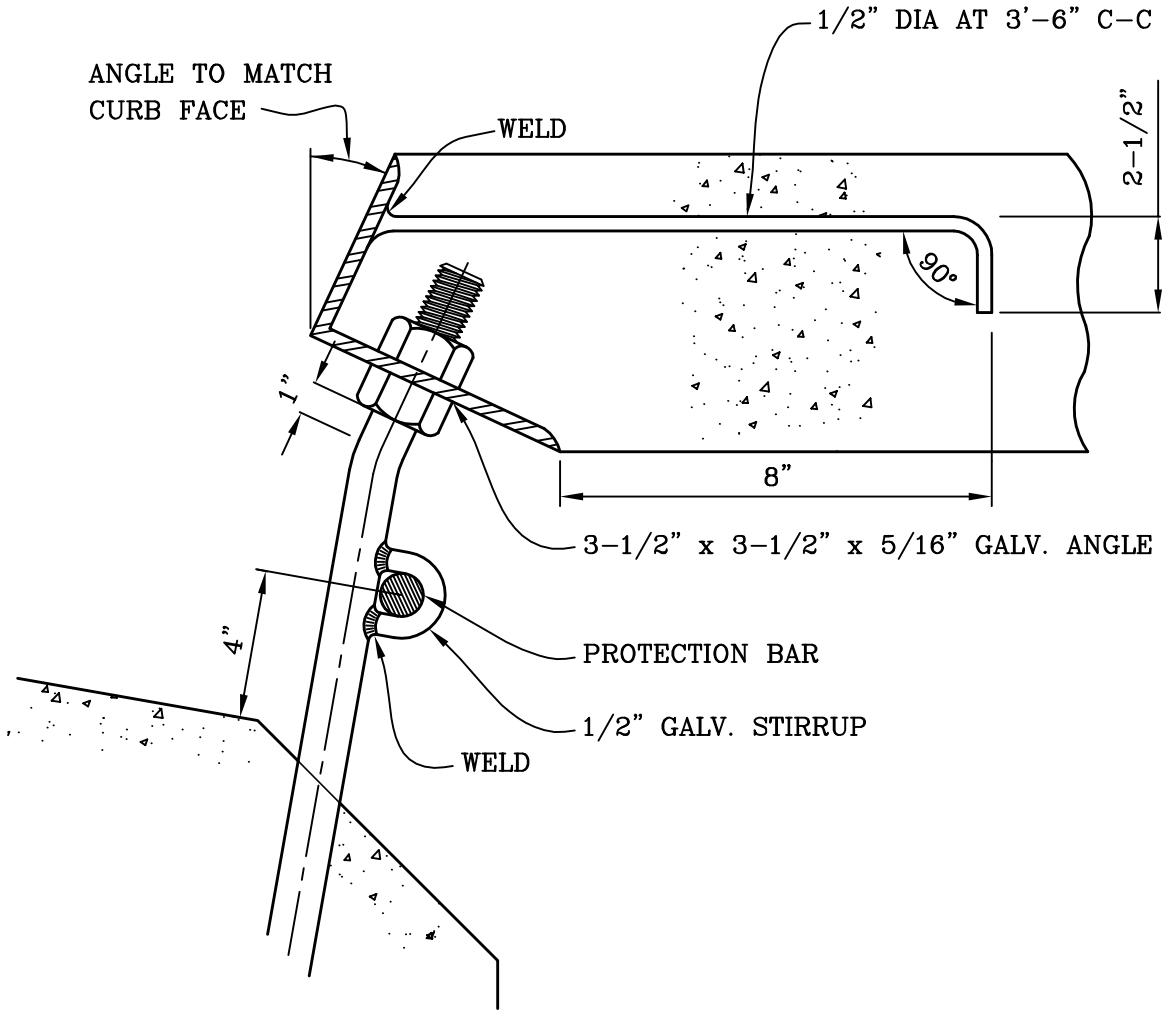

DETAIL A

(SEE SHEET 5 FOR NOTES)

CITY OF MISSION VIEJO

MISCELLANEOUS CURB INLET DETAILS AND NOTES

STANDARD PLAN NO.

404

APPROVED RCE 30190 DATE 9-23-03

SHT 3 OF 5

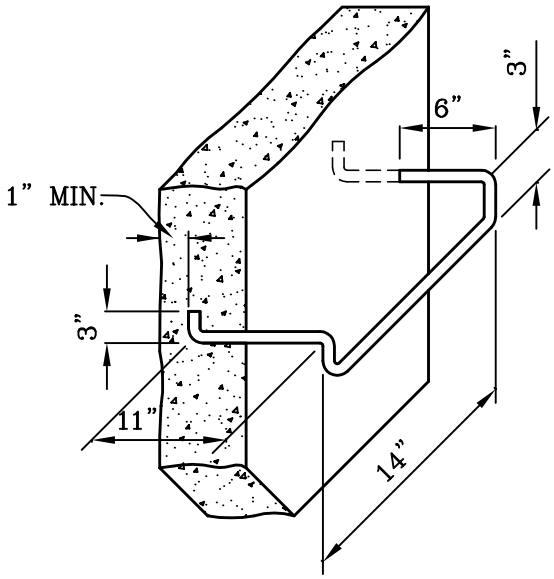

3/4" GALV. STEEL STEP
(SEE NOTE 17 ON SHEET 5)

STEP DETAIL

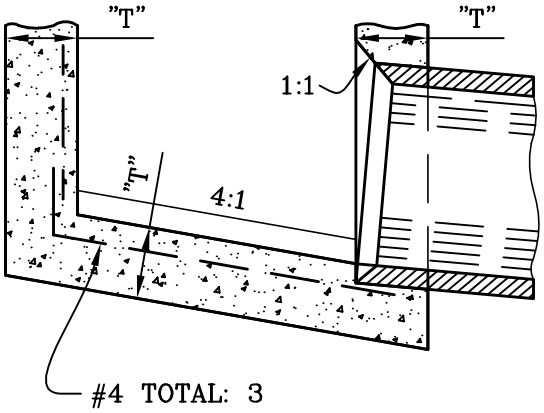

ALTERNATE
REINFORCED FLOOR

SEE NOTE 20 ON SHEET 5

CITY OF MISSION VIEJO

MISCELLANEOUS CURB INLET DETAILS AND NOTES

STANDARD PLAN NO.

404

APPROVED RCE 30190 DATE 9-23-03

SHT 4 OF 5

NOTES:

1. ONE EYE BOLT SHALL BE PLACED 12" FROM EACH END OF FACE PLATE.
2. EYE BOLTS SHALL BE SYMMETRICALLY SPACED IN THE CURB OPENING SO THAT THE UNSUPPORTED SPAN IS NOT MORE THAN 4'. SUPPORT BOLTS, WHEN USED, SHOULD BE CONSIDERED AS EYE BOLTS IN THE SPACING.
3. ONE COUPLING SHALL BE PLACED 6" TO THE RIGHT OR LEFT OF EACH EYE BOLT WITH THE EXCEPTION OF THE LAST EYE BOLT. COUPLINGS SHALL BE THREADED TO FACILITATE REMOVAL OF PROTECTION BAR.
4. GALVANIZED STEEL SUPPORT BOLTS SHALL BE INSTALLED WHEN LENGTH OF CURB OPENING EXCEEDS 7'-0" AND SHALL BE SPACED AT NOT MORE THAN 7'-0" O.C. AND NOT LESS THAN 5'-0" O.C.
5. FACE PLATE ANCHORS SHALL BE UNIFORMLY SPACED NOT TO EXCEED 4' BETWEEN CENTERS AND SHALL BE PLACED 4 1/2" FROM EACH END OF FACE PLATE.
6. A COUPLING MAY BE OMITTED PROVIDED THE PROTECTION BAR IS REMOVABLE AFTER INSTALLATION.
7. ALL METAL SHALL BE GALVANIZED AFTER FABRICATION.
8. SUPPORT BOLTS, EYE BOLTS, AND ANCHORS MAY BE ATTACHED BY A FULL PENETRATION BUTT WELD AS AN ALTERNATE.
9. PLACE A 3/4" PROTECTION BAR HORIZONTALLY ACROSS THE ENTIRE LENGTH OF THE CURB OPENING.
10. CURB SECTION SHALL MATCH ADJACENT CURB TYPE.
11. HEIGHT OF CURB OPENING WILL VARY WITH THE TYPE OF CURB AND THE DEPTH OF THE LOCAL DEPRESSION (STD. PLAN 406).
12. USE OF ANGLE FACE PLATE AS SHOWN ON SHEET 3 SHALL BE ALLOWED ONLY WHEN ON APPROVED PLANS.
13. FOR "T" WALL THICKNESS SEE TABLE ON INLET STD. PLAN.
14. REINFORCING STEEL SHALL BE #4 BARS AT 12" = CENTERS PLACED 1 1/2" CLEAR TO INSIDE OF BOX UNLESS OTHERWISE SHOWN.
15. STEPS - NONE REQUIRED WHEN "H" IS 3'-6" OR LESS. INSTALL ONE STEP 16" ABOVE FLOOR WHEN "H" IS MORE THAN 3'-6" AND LESS THAN 5'-0". WHERE "H" IS MORE THAN 5'-0", STEPS SHALL BE EVENLY SPACED AT 16" INTERVALS FROM 16" ABOVE FLOOR TO WITHIN 12" OF THE TOP OF THE BOX. PLACE STEPS IN WALL WITHOUT PIPE OPENINGS.
16. PIPE(S) CAN BE PLACED IN ANY WALL.
17. EXCEPT FOR INLETS USED AS JUNCTION BOXES, BASIN FLOORS SHALL HAVE A MINIMUM SLOPE OF 4:1 FROM ALL DIRECTION TOWARD OUTLET PIPE AND SHALL HAVE A WOOD TROWEL FINISH.
18. ALTERNATIVE REINFORCED FLOOR AT THE OPTION OF THE CONTRACTOR.

CITY OF MISSION VIEJO

MISCELLANEOUS CURB INLET DETAILS AND NOTES

STANDARD PLAN NO.

404

9-23-03

APPROVED RCE 30190 DATE

SHT 5 OF 5

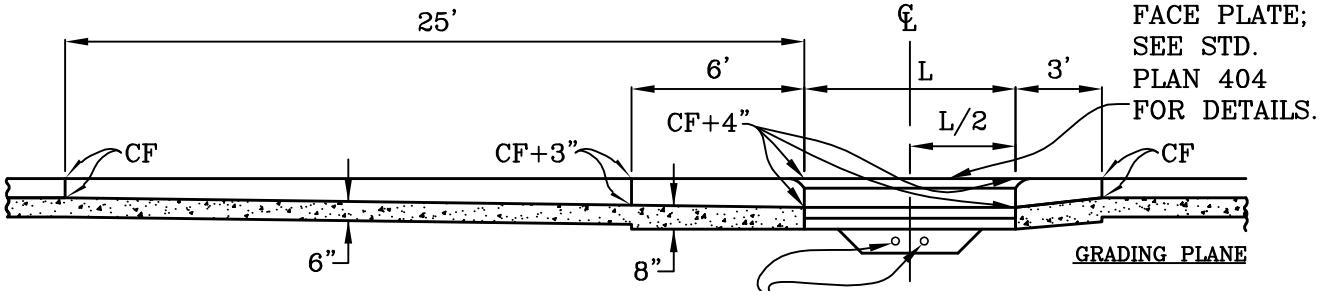

SECTION A–A

PLACE MIN. OF TWO 2" WEEPHOLES AT 12" C–C IN C.B. FILL BETWEEN GRADING PLANE AND CONC. DEPRESSION WILL BE BASE MATERIAL.

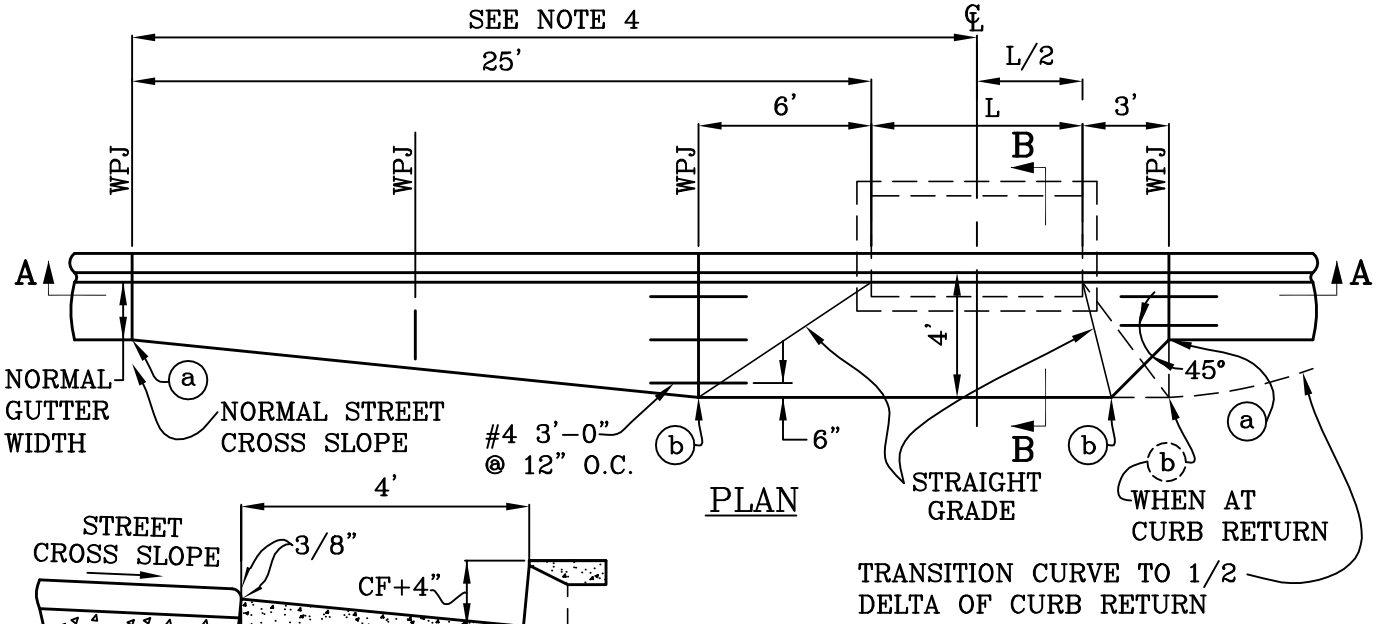

PLAN

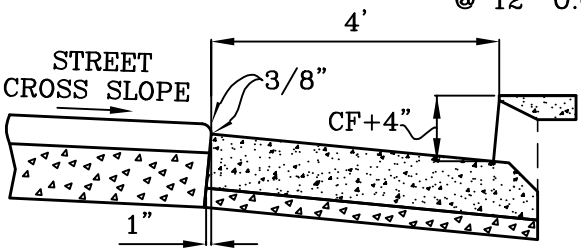

SECTION B–B

POINT	6" TO 10" CF TRANS. DISTANCE BELOW T.C.	8" TO 12" CF TRANS. DISTANCE BELOW T.C.
a	.38'	.50'
b	.34'	.47'

BASED ON 1.7% STREET CROSSFALL.

NOTES:

1. LOCAL DEPRESSION SHALL NOT BE CONSTRUCTED UNTIL CONNECTING CURB AND GUTTER HAS BEEN COMPLETED OR SHALL BE CONSTRUCTED MONOLITHICALLY WITH CONNECTING CURB AND GUTTER, UNLESS OTHERWISE APPROVED BY CITY ENGINEER.
2. LENGTH OF OPENING "L" SHALL BE SPECIFIED ON PLANS.
3. BOTH ENDS OF DEPRESSION SHALL BY SYMMETRICAL ABOUT ℄ OF OPENING IN SUMP CONDITION.
4. SEE STD. PLAN 404 FOR CURB OPENING DETAIL.
5. SEE STD. PLAN 321 FOR JOINT DETAILS.

CITY OF MISSION VIEJO

LOCAL DEPRESSION

STANDARD PLAN NO.

406

9-23-03

APPROVED RCE 30190 DATE

SHT 1 OF 2

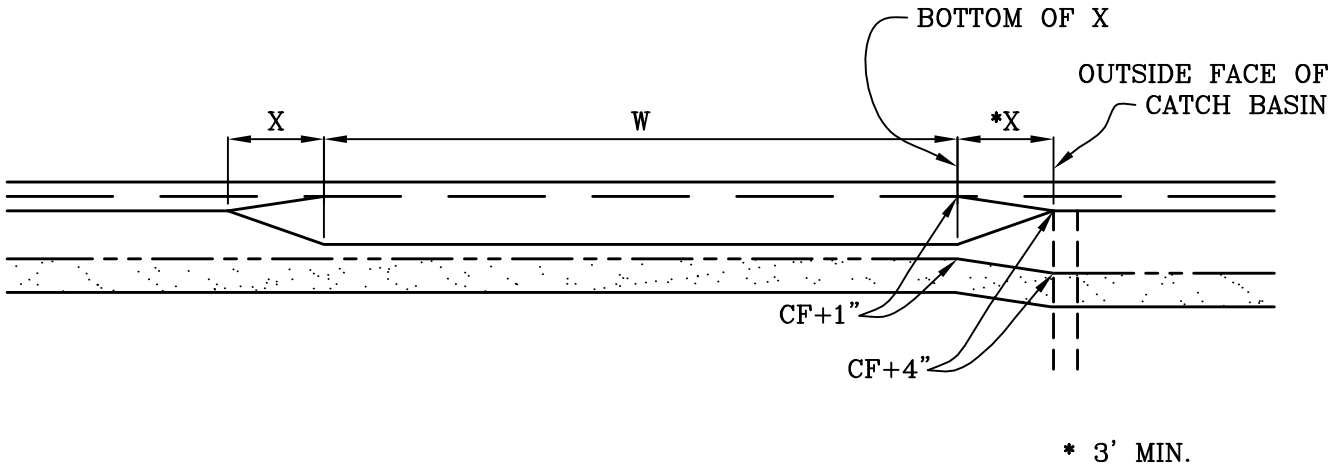

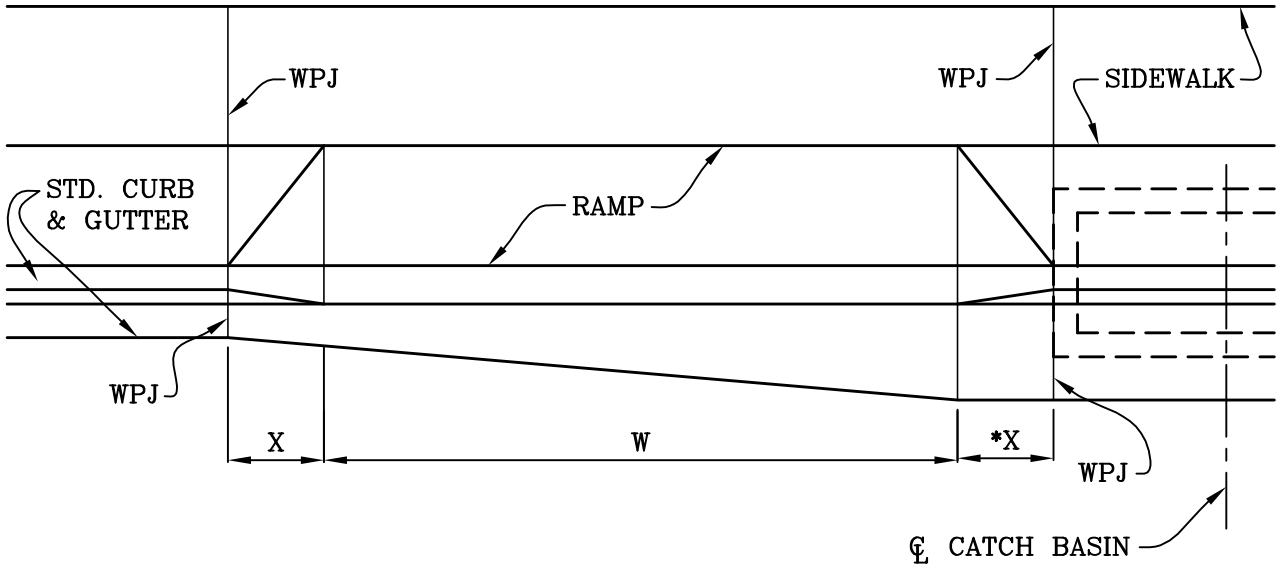

NOTES:

1. TYPE A LOCAL DEPRESSION SHALL BE USED ADJACENT TO DRIVEWAY DEPRESSIONS ONLY.

2. USE OF TYPE A LOCAL DEPRESSION MAY REQUIRE LENGTHENING OF INLET TO PROVIDE ADEQUATE HYDRAULIC CAPACITY.

CITY OF MISSION VIEJO

LOCAL DEPRESSION (TYPE A)

STANDARD PLAN NO.

406

APPROVED | RCE 30190 | DATE 9-23-03

SHT 2 OF 2

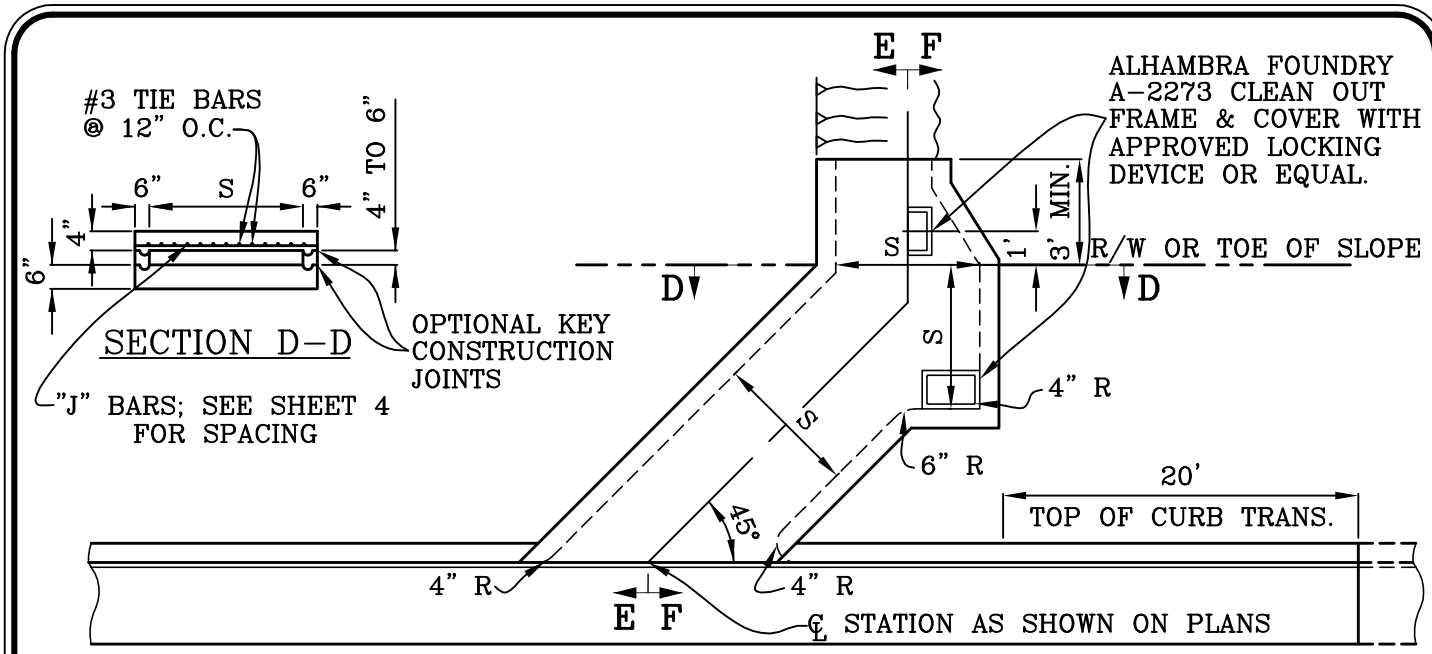

PLAN

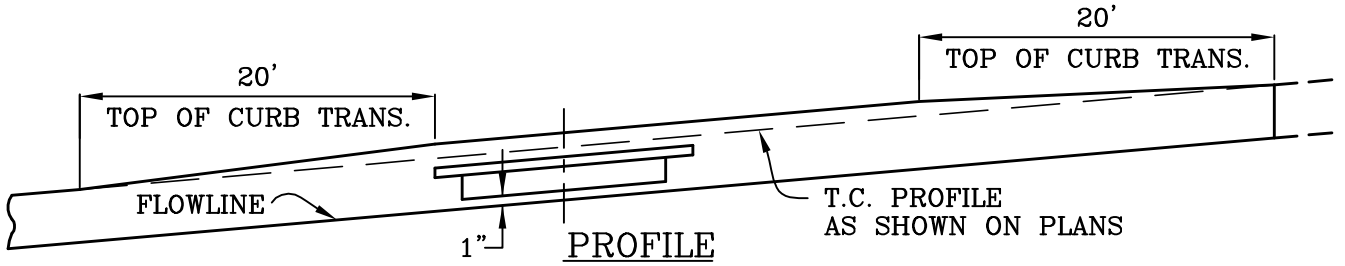

PROFILE

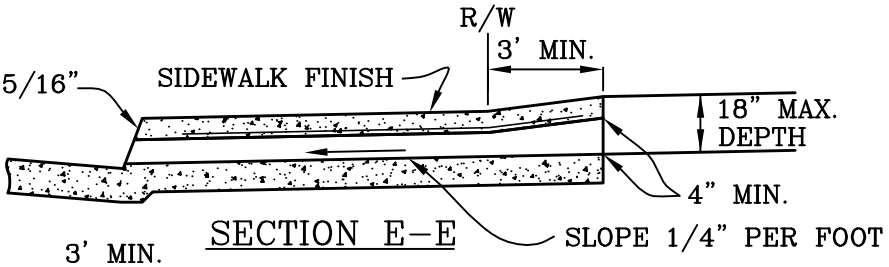

SECTION E–E

NOTES:
1. SEE SHT. 4 FOR DETAILS AND NOTES.
2. SPAN 'S' AND HEIGHT OF OPENING AND CURB FACE AT CULVERT SHALL BE NOTED ON PLANS.

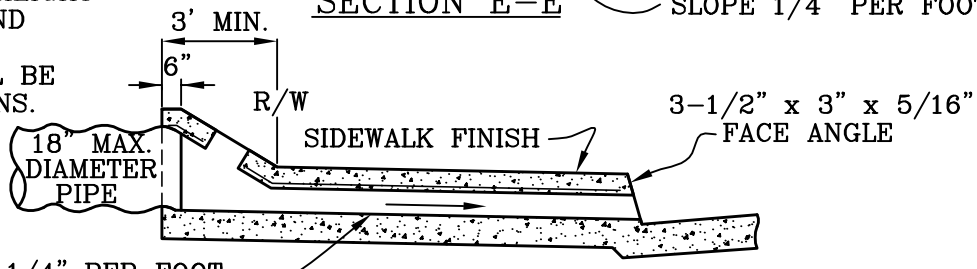

SECTION F–F

CITY OF MISSION VIEJO

	PARKWAY CULVERT (TYPE A)	STANDARD PLAN NO. 407
	APPROVED RCE 30190 9-23-03 DATE	SHT 1 OF 4

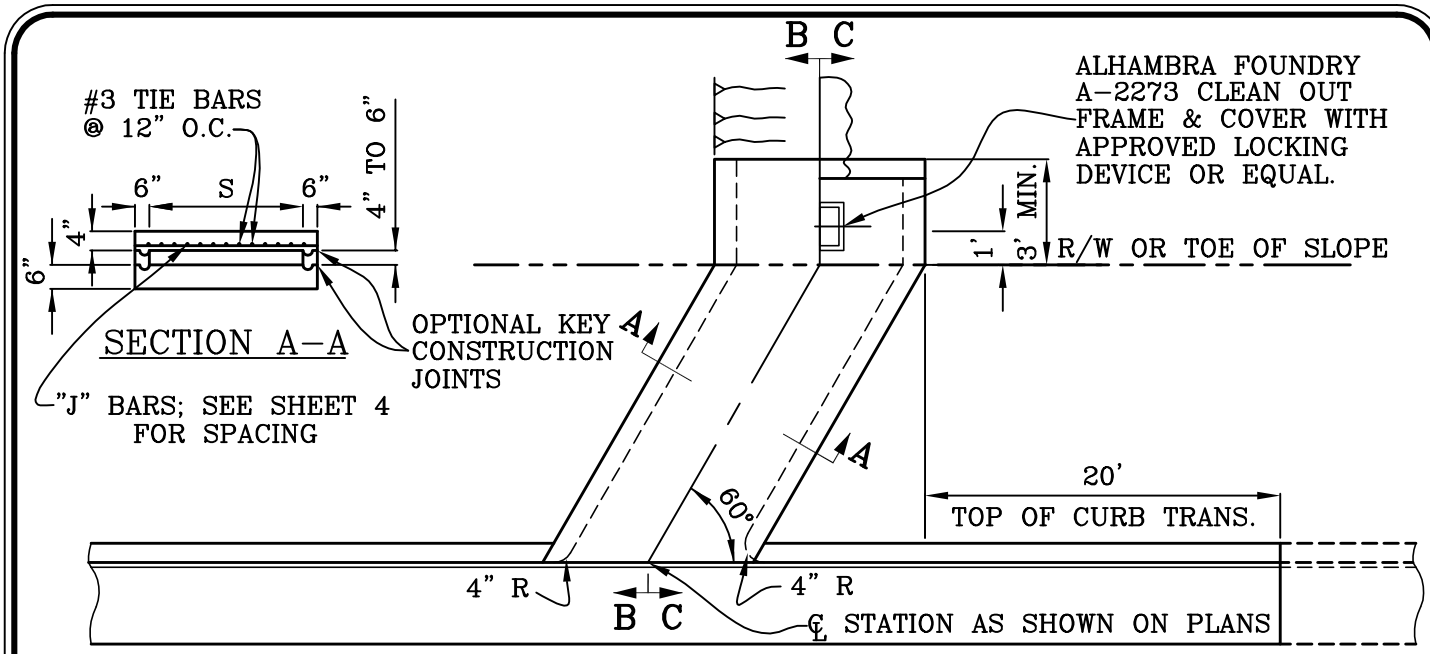

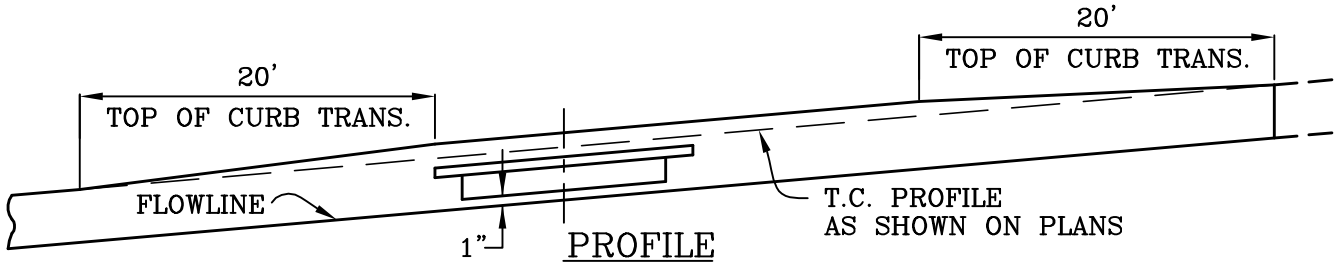

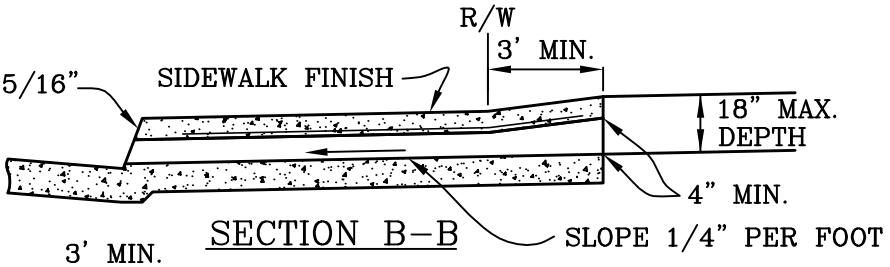

NOTES:
1. SEE SHT. 4 FOR DETAILS AND NOTES.
2. SPAN 'S' AND HEIGHT OF OPENING AND CURB FACE AT CULVERT SHALL BE NOTED ON PLANS.

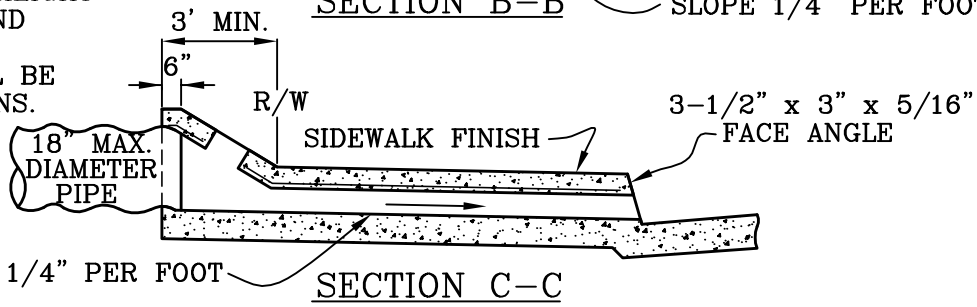

CITY OF MISSION VIEJO

	PARKWAY CULVERT (TYPE B)	STANDARD PLAN NO. 407
	APPROVED — RCE 30190 — DATE 9-23-03	SHT 2 OF 4

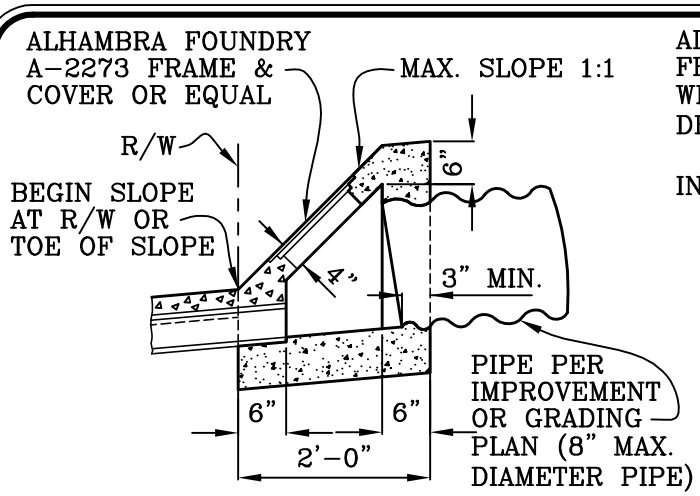

CASE 1 INLET

TRANSITION STRUCTURE SECTION

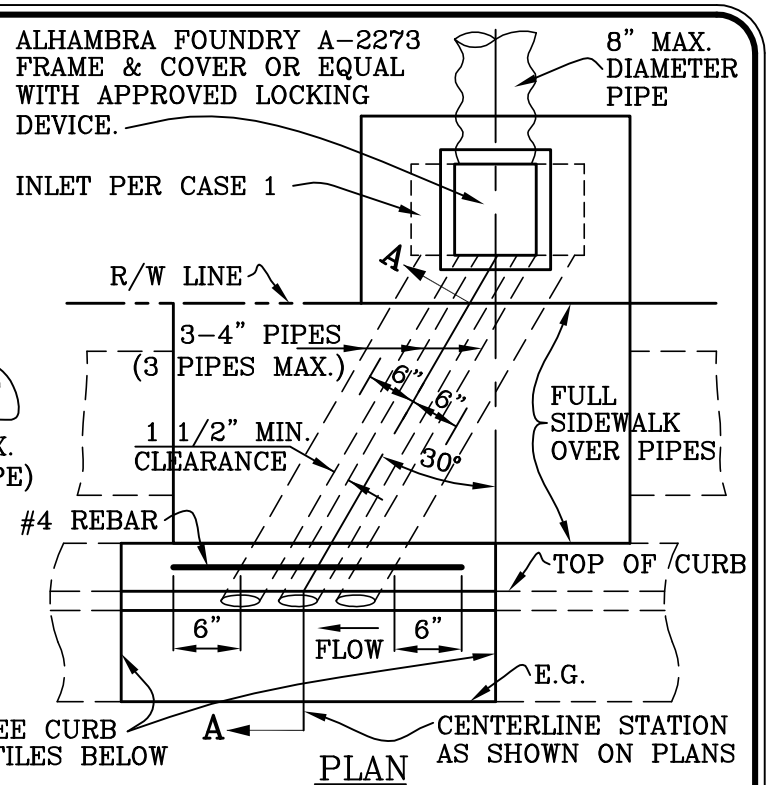

PLAN

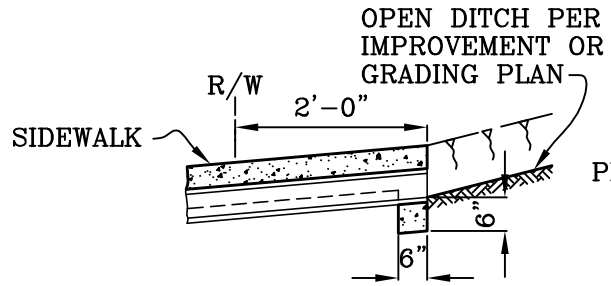

CASE 2 INLET

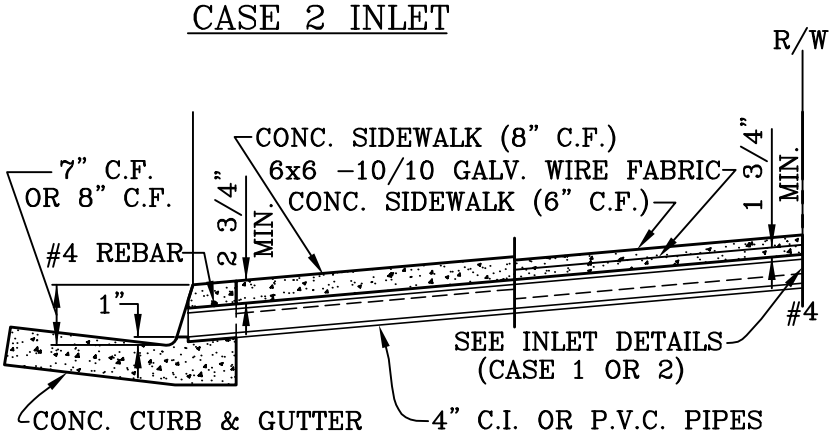

SECTION A-A

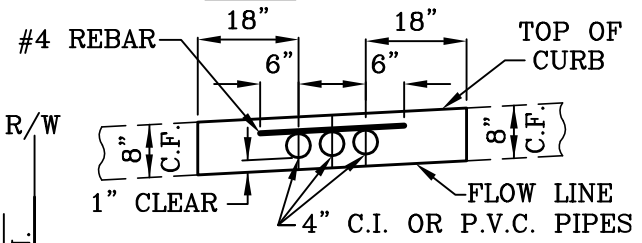

CURB PROFILE

8" NORMAL CURB FACE

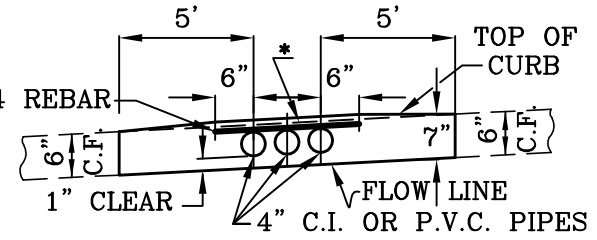

*NORMAL T.C. GRADE LINE AS SHOWN ON PROFILE

CURB PROFILE

6" NORMAL CURB FACE

NOTES:

1. SEE SHEET 4 FOR DETAILS AND NOTES.
2. ALHAMBRA FOUNDRY A-470 RECTANGULAR CAST IRON PIPE MAY BE SUBSTITUTED AT THE CONTRACTOR'S OPTION OR AS SPECIFIED ON THE PLANS.
3. CAST IRON FACILITIES SHALL HAVE A BITUMINOUS COATING CONFORMING TO AASHO DESIGNATION:M190.

CITY OF MISSION VIEJO

MISSION VIEJO CALIFORNIA 1988	PARKWAY CULVERT (TYPE C)	STANDARD PLAN NO. 407
	Robert Henderson 9-23-03	
	APPROVED RCE 30190 DATE	SHT 3 OF 4

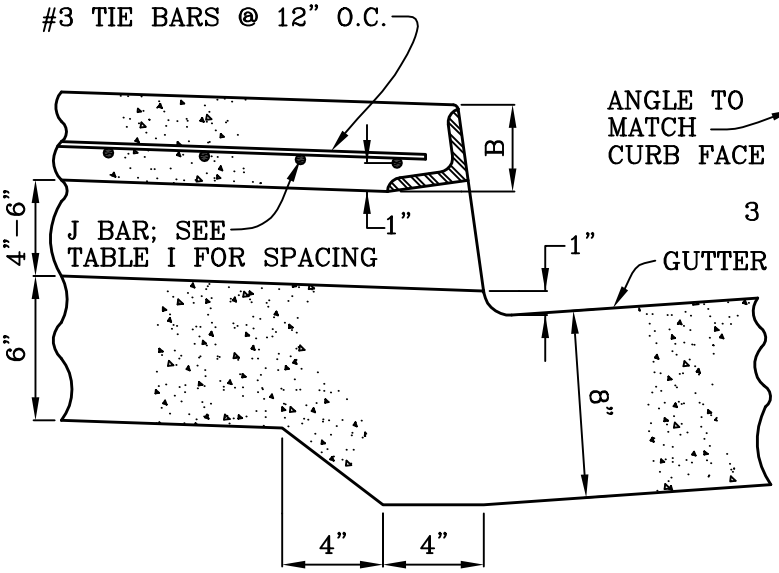

OUTLET DETAIL

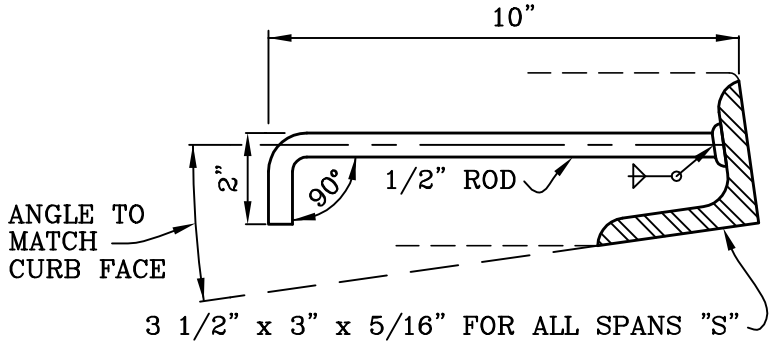

LENGTH OF CURB OPENING	NO. OF ANCHORS
3' OR LESS	2
3'–6" TO 6'–0"	3

FACE ANGLE ANCHOR DETAIL

NOTES:

1. USE PARKWAY CULVERT TYPE "A" WHEN INLET VELOCITIES WILL BE 10 FEET PER SECOND OR GREATER.
2. USE PARKWAY CULVERT TYPE "B" WHEN INLET VELOCITIES WILL BE LESS THAN 10 FEET PER SECOND.
3. USE PARKWAY CULVERT TYPE "C" WHEN INLET VELOCITIES ARE LESS THAN 5 FEET PER SECOND.
4. FLOOR OF PARKWAY CULVERT SHALL HAVE A STEEL TROWEL FINISH.
5. ALL EXPOSED METAL SHALL BE GALVANIZED AFTER FABRICATION.
6. HEIGHT OF CURB OPENING FOR TYPES "A" & "B" PARKWAY CULVERTS WILL VARY WITH TYPE OF CURB.
7. SPAN "S" AND HEIGHT OF CURB OPENING WILL BE DETERMINED FROM THE REQUIRED HYDRAULIC CAPACITY AND LIMITED TO THE DIMENSION IN TABLE I.
8. REINFORCING STEEL SHALL BE 1" CLEAR TO INSIDE OF CULVERT UNLESS OTHERWISE SHOWN.

SPAN S	B	STEEL SCHEDULE J – BARS		
		SIZE	SPACING C–C	LENGTH
2'–0"	3"	#3	7"	2'–9"
2'–6"	"	"	"	3'–3"
3'–0"	"	"	"	3'–9"
3'–6"	"	"	6"	4'–3"
4'–0"	"	"	5"	4'–9"
4'–6"	4"	"	6 1/2"	5'–3"
5'–0"	"	"	5"	5'–9"
5'–6"	"	"	4"	6'–3"
6'–0"	"	"	3 1/2"	6'–9"

TABLE I

CITY OF MISSION VIEJO

PARKWAY CULVERT (DETAILS & NOTES)

STANDARD PLAN NO.

407

9-23-03

APPROVED RCE 30190 DATE

SHT 4 OF 4

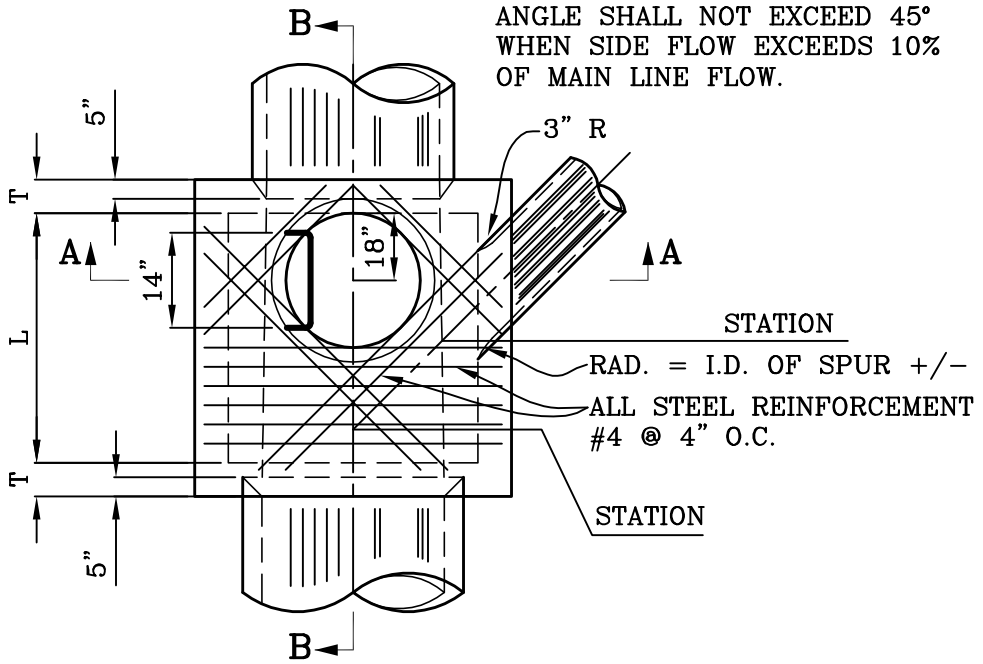

PLAN
(SHAFT NOT SHOWN)

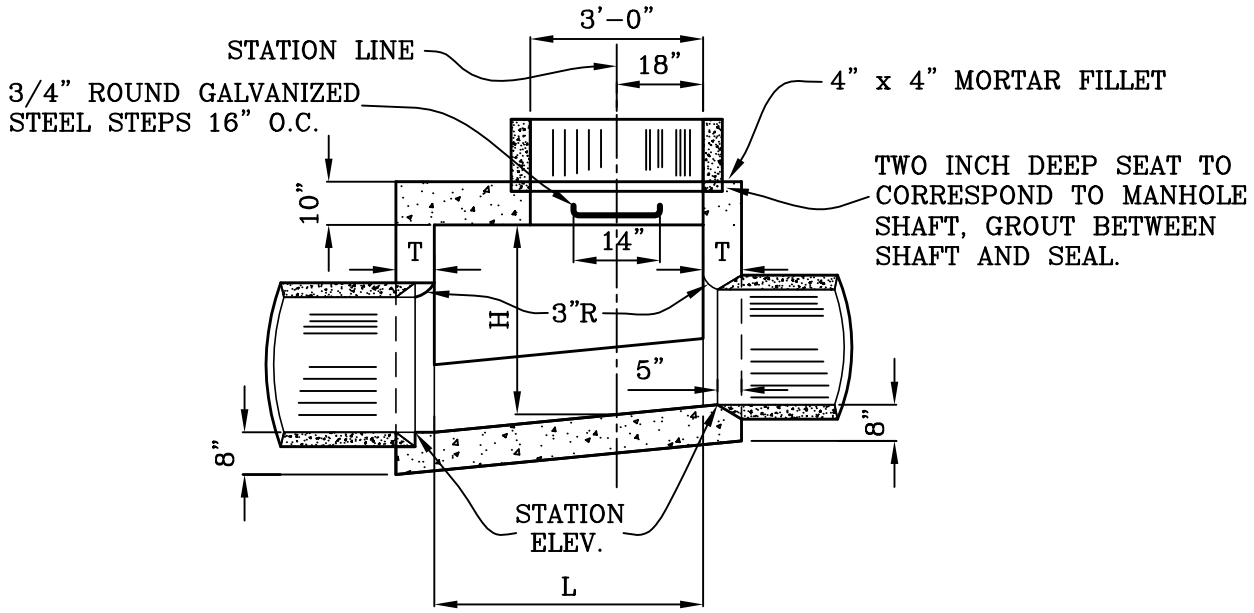

SECTION B-B
(SEE NOTES ON SHEET 4)

CITY OF MISSION VIEJO

	JUNCTION STRUCTURE TYPE I	STANDARD PLAN NO. 408
	9-23-03 APPROVED RCE 30190 DATE	SHT 1 OF 4

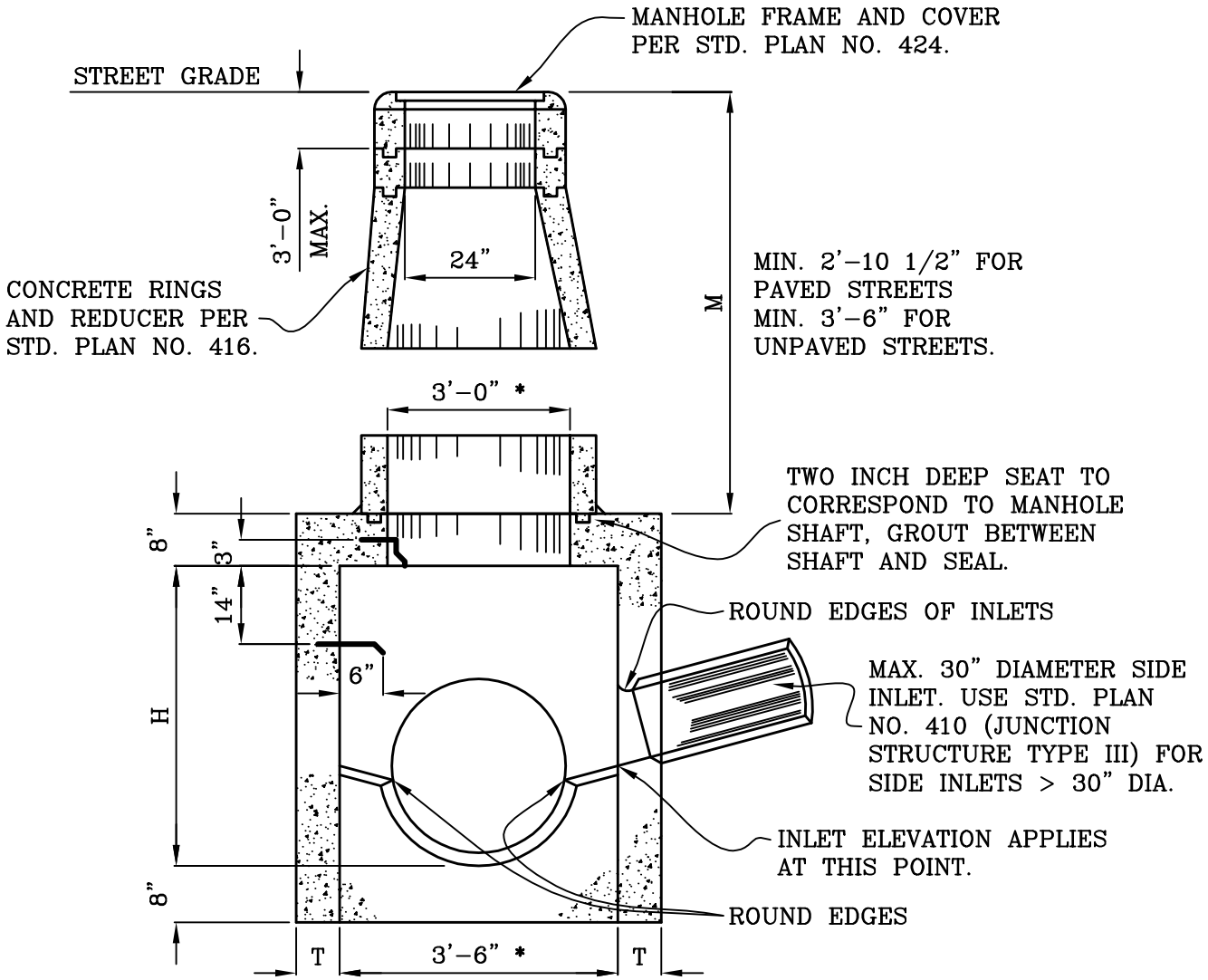

SECTION A–A

*MANHOLE SHAFT SHALL BE 4'–0" AND JUNCTION STRUCTURE BOTTOM WIDTH SHALL BE INCREASED TO 4'–0" MINIMUM WHEN M>15'. USE STD. PLAN NO. 419 WITH 6" RINGS WHEN M>15'.

(SEE NOTES ON SHEET 4)

CITY OF MISSION VIEJO

JUNCTION STRUCTURE TYPE I

STANDARD PLAN NO. 408

APPROVED RCE 30190 DATE 9-23-03

	MAX.	MIN.
PAVED STREETS –	11"	8 1/2"
UNPAVED STREETS –	16"	15"

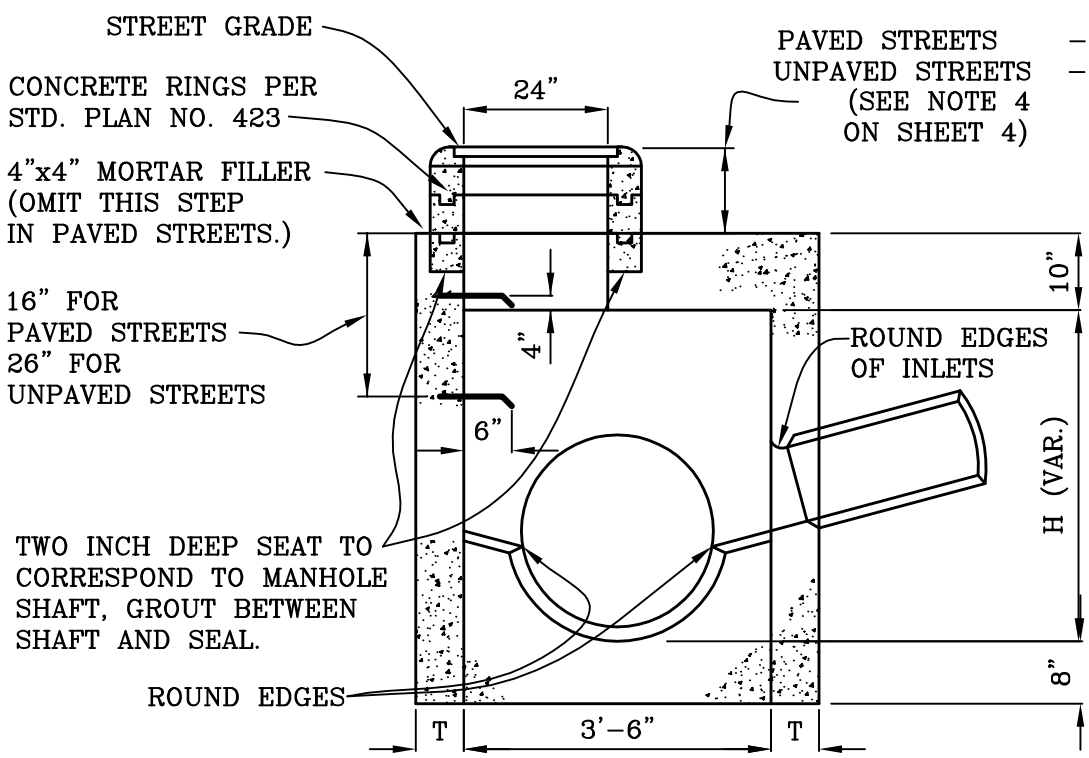

SECTION C–C

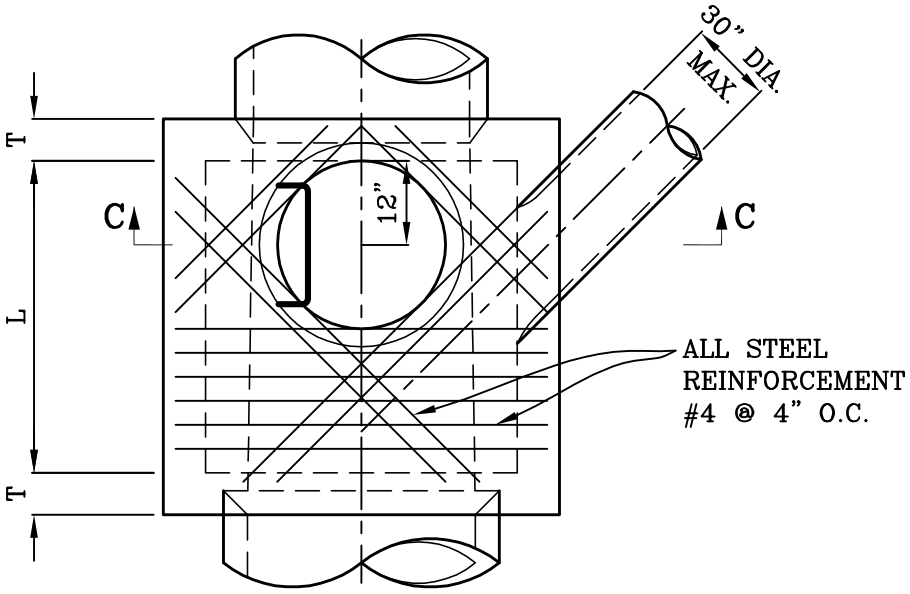

DETAIL N

SHAFT NOT SHOWN
(SEE NOTE 3 ON SHEET 4)

CITY OF MISSION VIEJO

JUNCTION STRUCTURE TYPE I

STANDARD PLAN NO. 408

9-23-03

APPROVED RCE 30190 DATE

SHT 3 OF 4

NOTES:

1. HEIGHT H IN SEC. A–A AND SEC. B–B SHALL NOT BE LESS THAN 4'–0", BUT MAY BE INCREASED AT THE OPTION OF THE ENGINEER. PROVIDED THAT THE VALUE OF M SHALL NOT BE LESS THAN THE MINIMUM SPECIFIED AND THAT THE REDUCER SHALL BE USED FOR H IN SEC. C–C (SEE NOTE 4).

2. LENGTH L SHALL BE 4'–0" FOR INLETS OF 20" OR LESS AND 5'–0" FOR INLETS GREATER THAN 20" UNLESS OTHERWISE SHOW ON THE IMPROVEMENT PLAN. MAY BE INCREASED A MAXIMUM OF (1) FOOT AT EACH END TO MEET PIPE ENDS. CONTINUE #4 AT 4" O.C.

3. SHAFT SHALL BE CONSTRUCTED AS PER SEC. C–C AND DETAIL N WHEN DEPTH M FROM STREET GRADE TO TOP OF BOX IS LESS THAN 2'–10 1/2" FOR PAVED STREETS OR 3'–6" FOR UNPAVED STREETS.

4. DEPTH M MAY BE REDUCED TO AN ABSOLUTE LIMIT OF 6" WHEN LARGER VALUES OF M WOULD REDUCE H IN SEC. C–C TO 3'–6" OR LESS.

5. T SHALL BE 8" FOR VALUES OF H UP TO AND INCLUDING 8'. T SHALL BE 10" FOR VALUES OF H OVER 8'.

6. STEPS SHALL BE 3/4" ROUND GALVANIZED STEEL AND ANCHORED NOT LESS THAN 5" IN THE WALLS OF THE STRUCTURE AND SHALL PROJECT A MIN. OF 6" FROM POINT OF EMBEDMENT. UNLESS OTHERWISE SHOWN, STEPS SHALL BE PLACED 16" O.C. THE LOWEST STEP SHALL NOT BE MORE THAN 24" ABOVE THE LEDGE AT THE SIDE OF MANHOLE FLOOR.

7. REINFORCING STEEL SHALL BE #4 BARS, DEFORMED, STRAIGHT BARS 1 1/2" CLEAR FROM FACE OF CONCRETE.

8. STATIONS OF MANHOLES SHOWN ON IMPROVEMENT PLAN APPLY AT CENTERLINE OF SHAFT.

9. FLOOR OF MANHOLE SHALL BE STEEL–TROWELED.

10. RINGS, REDUCER, AND PIPE FOR ACCESS SHAFT SHALL BE SEATED IN 1:2 MORTAR AND NEATLY POINTED OR WIPED INSIDE SHAFT.

11. LEDGE SHALL BE SLOPED AT 2" PER FOOT.

12. USE JUNCTION STRUCTURE TYPE I FOR OUTLET PIPE DIAMETERS OF 42" OR LESS AND INLET DIAMETERS OF 30" OR LESS.

CITY OF MISSION VIEJO

MISSION VIEJO CALIFORNIA 1988

JUNCTION STRUCTURE TYPE I

Kevin Henderson 9-23-03

APPROVED RCE 30190 DATE

STANDARD PLAN NO.

408

SHT 4 OF 4

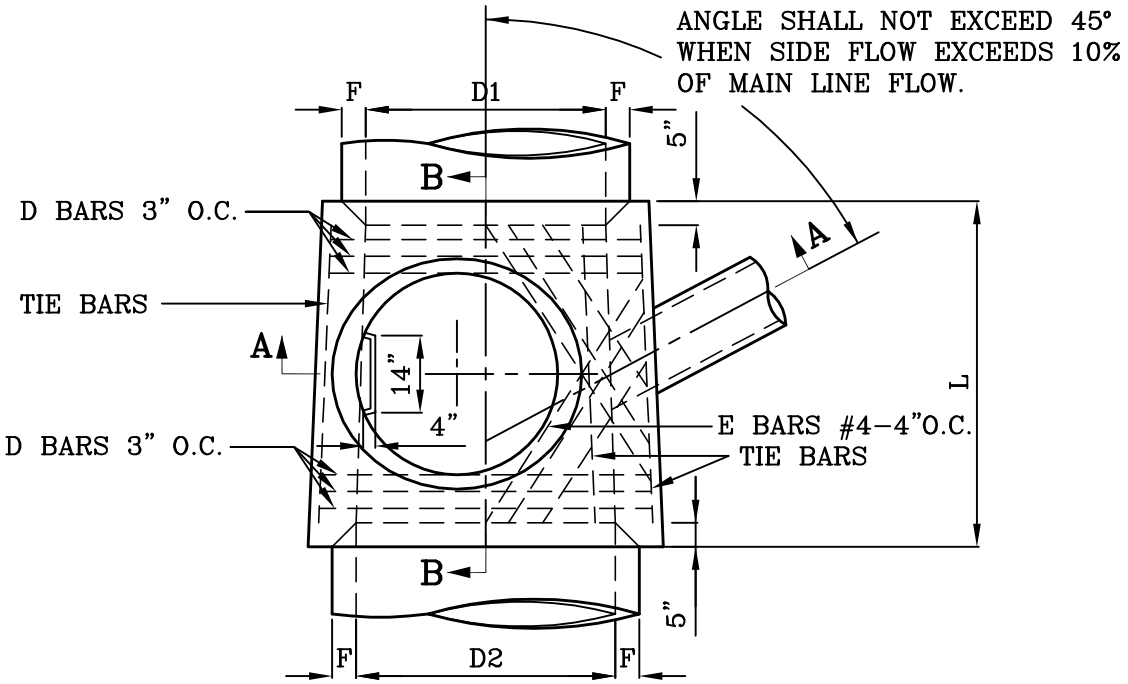

PLAN

(SHAFT NOT SHOWN)

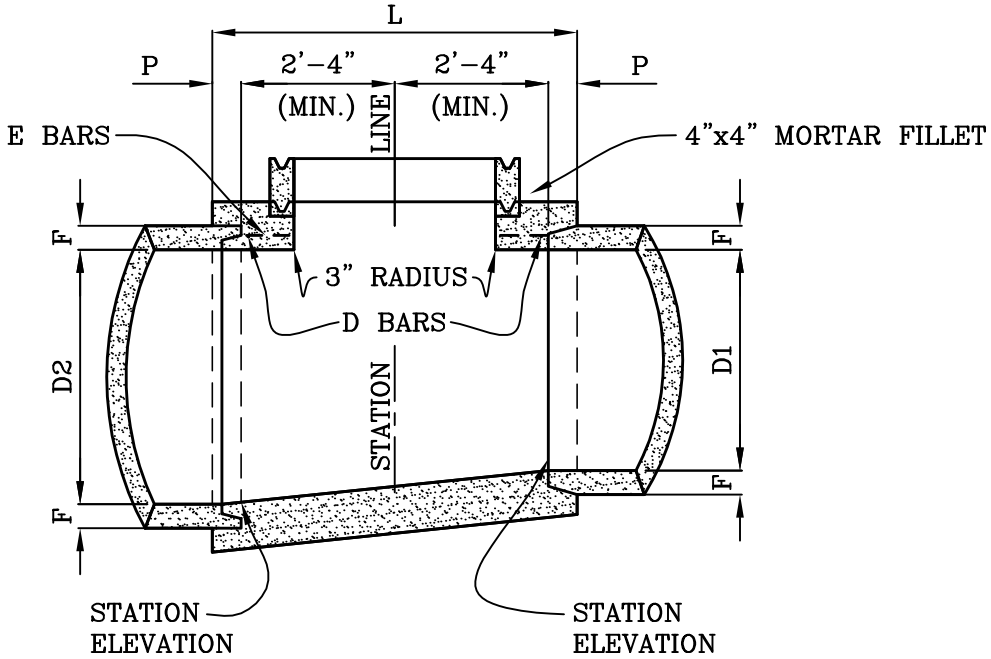

SECTION B-B

CITY OF MISSION VIEJO

JUNCTION STRUCTURE
TYPE II

STANDARD PLAN NO.

409

9-23-03

APPROVED RCE 30190 DATE

SHT 1 OF 5

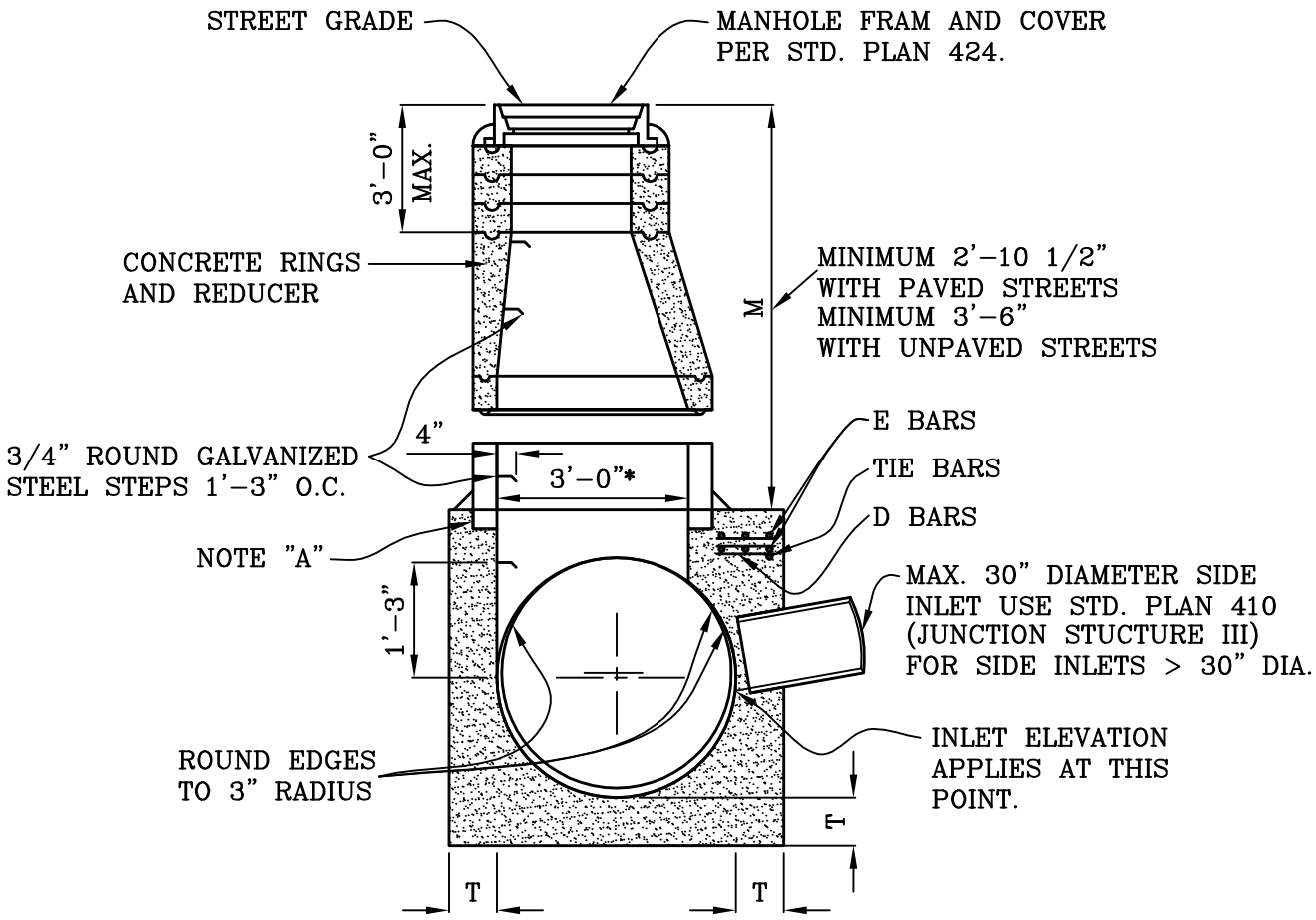

SECTION A-A

NOTE "A"
TWO (2) INCH DEEP SEAT TO CORRESPOND TO MANHOLE SHAFT, GROUT BETWEEN SHAFT AND SEAL.

CITY OF MISSION VIEJO

JUNCTION STRUCTURE TYPE II

STANDARD PLAN NO.

409

Roger Henderson 9-23-03

APPROVED RCE 30190 DATE

SHT 2 OF 5

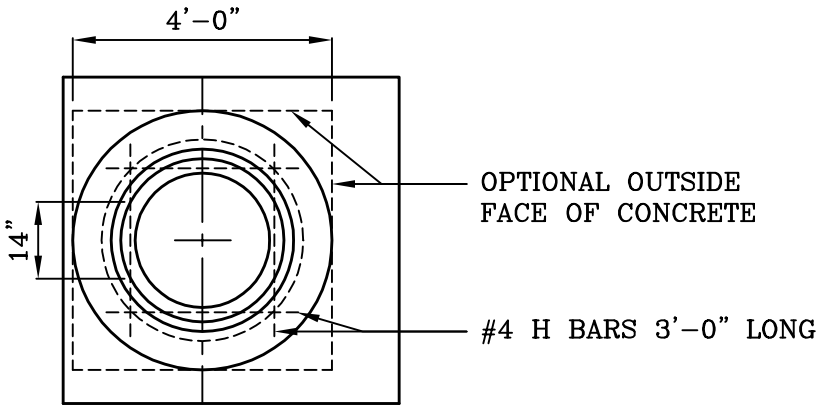

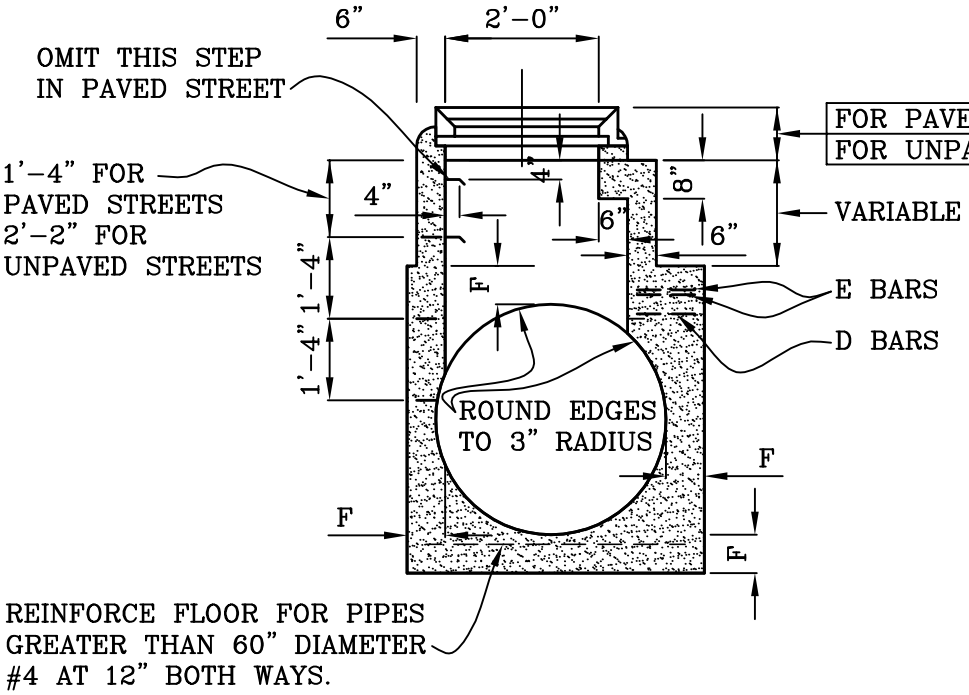

	MAX.	MIN.
FOR PAVED STREES	11"	8 1/2"
FOR UNPAVED STREETS	16"	15"

DETAIL M

CITY OF MISSION VIEJO

JUNCTION STRUCTURE
TYPE II

STANDARD
PLAN NO.

409

9-23-03

APPROVED RCE 30190 DATE

SHT 3 OF 5

STEEL TABLE FOR JUNCTION STRUCTURE–TYPE II						
D BARS				E BARS		
DIAM. D2	MINIMUM NO. REQ'D	SIZE	LENGTH	MINIMUM NO. REQ'D	SIZE	LENGTH
42" *	6	#5	4'–6"	4	#4	3'–2"
45" *	6	#5	4'–10"	4	#4	3'–5"
48"	6	#5	5'–1"	4	#4	3'–7"
51"	6	#5	5'–5"	6	#4	4'–9"
54"	6	#5	5'–9"	6	#4	5'–1"
57"	6	#5	6'–1"	6	#4	5'–6"
60"	6	#5	6'–4"	6	#4	5'–11"
63"	6	#5	6'–8"	6	#4	6'–3"
66"	6	#5	7'–0"	8	#4	6'–8"
69"	6	#5	7'–4"	8	#4	6'–8"
72"	6	#5	7'–7"	8	#4	6'–8"
78"	6	#5	8'–3"	8	#4	6'–8"
84"	6	#5	8'–10"	10	#4	6'–8"
90"	6	#6	9'–6"	10	#4	6'–8"
96"	6	#6	10'–1"	10	#4	6'–8"
102"	6	#6	10'–10"	11	#4	6'–8"
108"	6	#6	11'–5"	11	#4	6'–8"
114"	6	#6	12'–0"	12	#4	6'–8"
120"	6	#6	12'–7"	12	#4	6'–8"
126"	6	#6	13'–1"	13	#4	6'–8"
132"	6	#6	13'–8"	13	#4	6'–8"
138"	6	#6	14'–2"	14	#4	6'–8"
144"	6	#6	14'–7"	14	#4	6'–8"

TABLE OF VALUES FOR T	
D2	T
42"	8"
45"	8"
48"	8"
51"	8 1/2"
54"	9"
57"	9 1/4"
60"	9 1/2"
63"	10"
66"	10 1/4"
69"	10 3/4"
72"	11"
78"	11 3/4"
84"	12 1/2"
90"	13 1/4"
96"	14"
102"	15 1/2"
108"	16"
114"	16 1/2"
120"	17"
126"	17"
132"	17 1/2"
138"	17 1/2"
144"	18"

*MANHOLE SHAFT SHALL BE 4'–0" AND JUNCTION STRUCTURE BOTTOM WIDTH SHALL BE INCREASED TO 4'0 MINIMUM WHEN M > 15. USE STD. PLAN 419 WITH 6" THICK RINGS WHEN M > 15.

CITY OF MISSION VIEJO

JUNCTION STRUCTURE TYPE II

STANDARD PLAN NO.

409

9-23-03

APPROVED RCE 30190 DATE

SHT 4 OF 5

NOTES:

1. CENTER OF MANHOLE SHAFT SHALL BE LOCATED OVER CENTERLINE OF STORM DRAIN WHEN DIAMETER OF D1 IS 48" OR LESS, IN WHICH CASE PLACE E BAR SYMMETRICALLY AROUND SHAFT AT 45 DEGREES WITH CENTERLINE.

2. LENGTH L MAY BE INCREASED ONE (1) FOOT MAX. AT EACH END TO MEET PIPE ENDS. CONTINUE D BARS AT 3" O.C.

3. DETAIL M: WHEN DEPTH OF MANHOLE FROM STREET GRADE TO TOP OF BOX IS LESS THAN 2'-10 1/2" FOR PAVED STREETS OR 3'-6" FOR UNPAVED STREETS, CONSTRUCT MONOLITHIC SHAFT AS PER DETAIL M. WHEN DIAMETER D IS 48" OR LESS, CENTER OF SHAFT SHALL BE LOCATED AS PER NOTE 2.

4. THICKNESS OF DECK SHALL VARY WHEN NECESSARY TO PROVIDE LEVEL PIPE SEAT, BUT SHALL NOT BE LESS THAN TABULAR VALUES FOR T, AS SHOWN ON SHEET 4 OF 5.

5. REINFORCING STEEL SHALL BE ROUND, DEFORMED BARS, 1 1/2" CLEAR FROM FACE TO CONCRETE UNLESS OTHERWISE SHOWN. SIZES AND LENGTHS ARE SHOWN IN TABLE ON SHEET 4 OF 5.

6. STEPS SHALL BE 3/4" ROUND, GALVANIZED STEEL AND ANCHORED NOT LESS THAN 6" IN THE WALLS OF THE STRUCTURE AND SHALL PROJECT A MIN. OF 4 INCHES FROM POINT OF EMBEDMENT.

7. RINGS, REDUCER, AND PIPE FOR ACCESS SHAFT SHALL BE SEATED IN 1:2 MORTAR AND NEATLY POINTED OR WIPED INSIDE THE SHAFT.

8. STATIONS OF MANHOLE SHOWN ON IMPROVEMENT PLAN APPLY AT CENTER OF SHAFT.

9. FLOOR OF MANHOLE SHALL BE STEEL-TROWELED TO SPRINGLINE.

10. BODY OF MANHOLE SHALL BE CONSTRUCTED IN ONE CONTINUOS OPERATION, EXCEPT THAT THE CONTRACTOR SHALL HAVE THE OPTION OF PLACING A CONSTRUCTION JOINT WITH A LONGITUDINAL KEYWAY AT THE SPRINGLINE.

11. FOR PIPE SIZES NOT SHOWN, USE TABLED VALUES FOR NEXT LARGER PIPE.

12. D BARS SHALL BE PLACED 3" O.C. E BARS SHALL BE PLACED 4" O.C. TIE BARS SHALL BE #4 SPACED 18" O.C. OR CLOSER.
WHEN L IS GREATER THAN 5'-6" AS SPECIFIED ON IMPROVEMENT PLAN, CONTINUE D BARS AT 6" O.C.
LENGTHS SHOWN IN TABLE ARE FOR LONGEST BARS. WHERE SHORTER BARS ARE REQUIRED, BEND OR CUT TO MEET FIELD REQUIREMENTS.

13. USE JUNCTION TYPE II FOR D2 PIPE DIAMETERS OF 42" OR GREATER AND INLET PIPE DIAMETERS FOR 30" OR LESS.

CITY OF MISSION VIEJO

JUNCTION STRUCTURE TYPE II

STANDARD PLAN NO.

409

9-23-03

APPROVED RCE 30190 DATE

SHT 5 OF 5

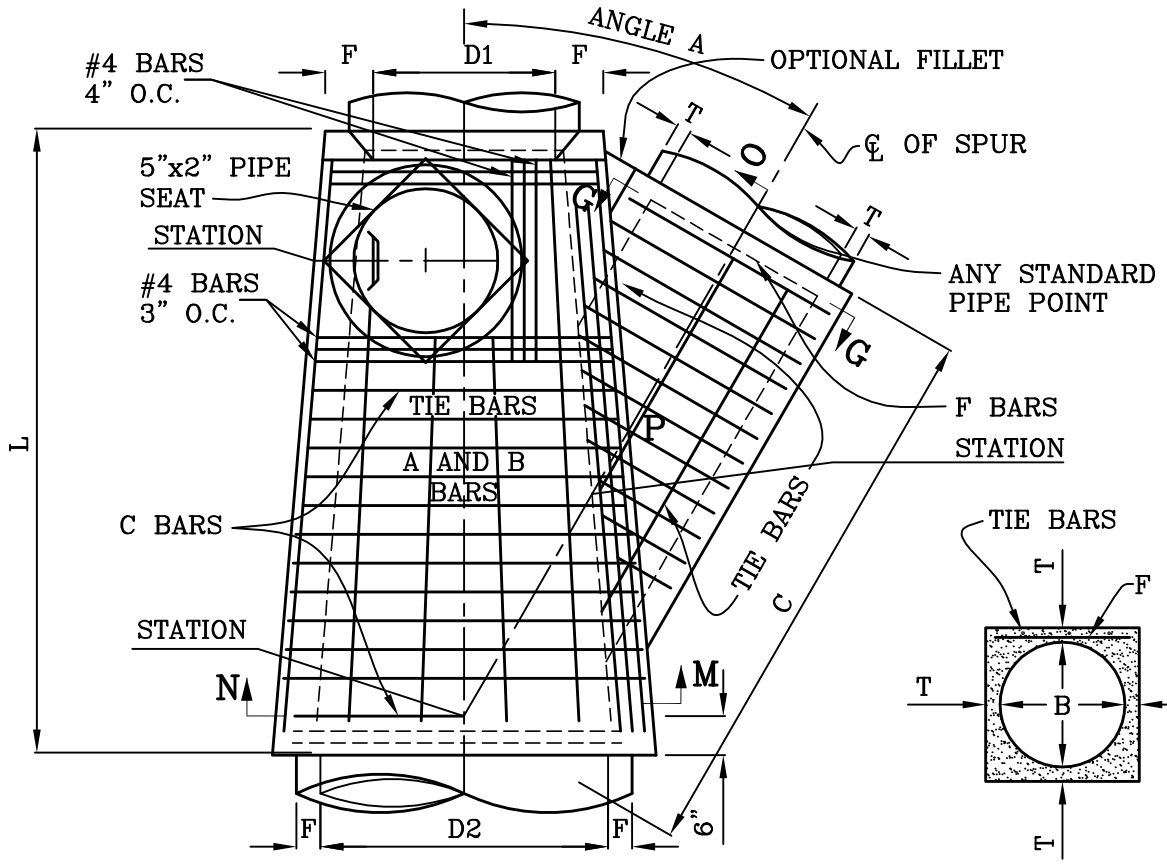

PLAN

(SHAFT NOT SHOWN)

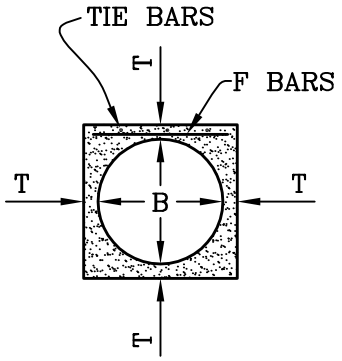

SECTION G–G

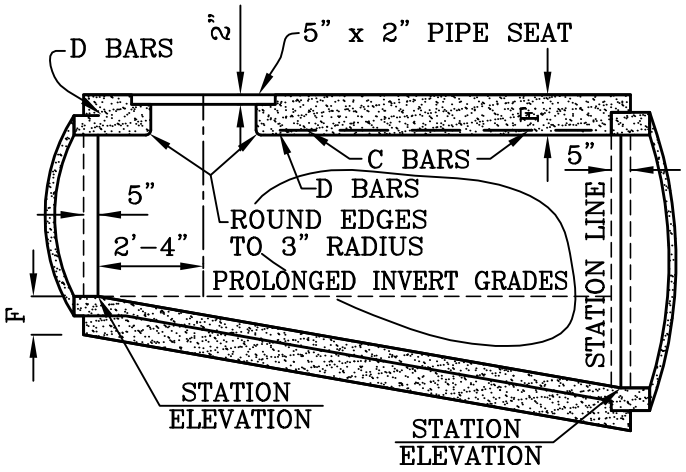

LONGITUDINAL SECTION

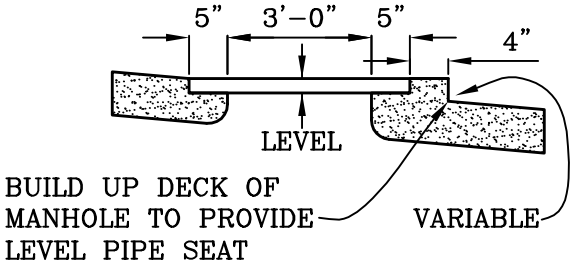

SEAT FOR SHAFT
WHEN TOP IS NOT LEVEL

CITY OF MISSION VIEJO

JUNCTION STRUCTURE
TYPE III

STANDARD PLAN NO.

410

APPROVED RCE 30190 DATE 9-23-03

SHT 1 OF 4

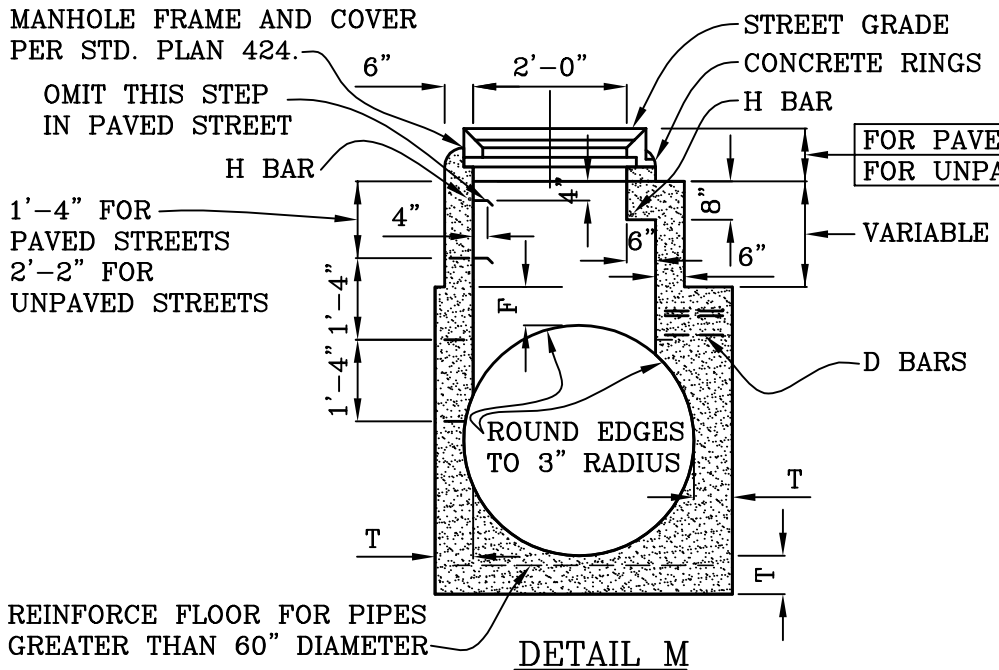

	MAX.	MIN.
FOR PAVED STREETS	11"	8 1/2"
FOR UNPAVED STREETS	16"	15"

DETAIL M

(NOTE: "A & B" BARS NOT SHOWN FOR CLARITY)

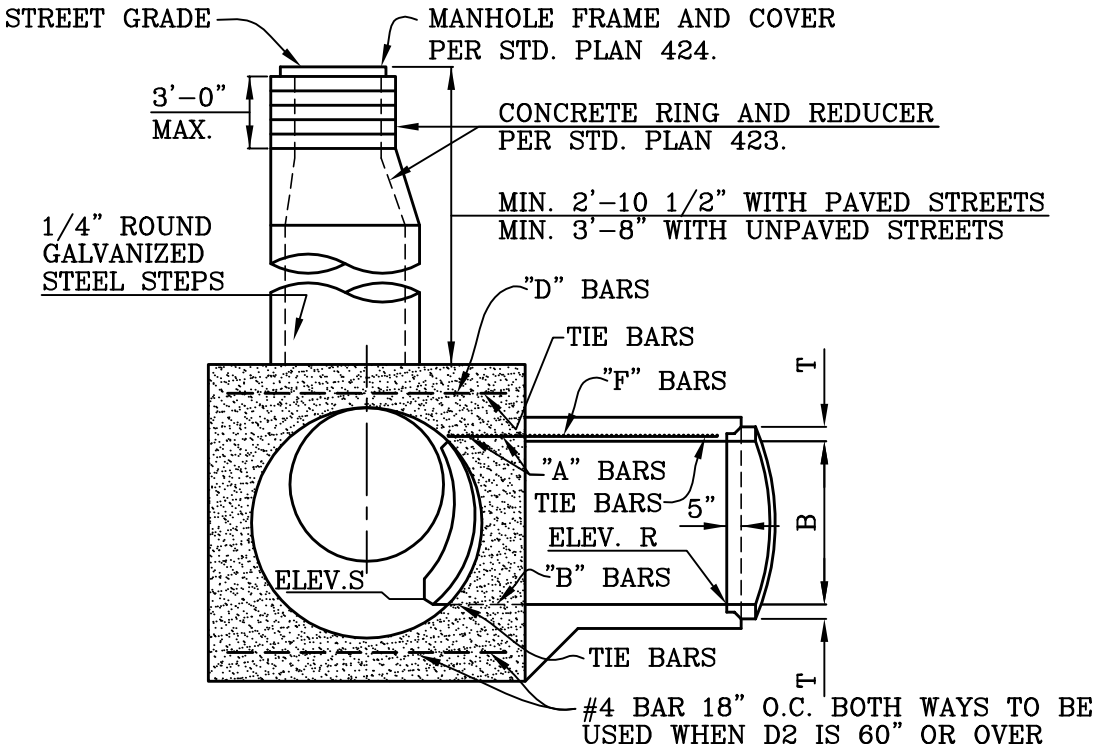

SECTION N-M-P-O

CITY OF MISSION VIEJO

JUNCTION STRUCTURE
TYPE III

STANDARD PLAN NO.

410

9-23-03

APPROVED RCE 30190 DATE

SHT 2 OF 4

TABLE OF VALUES FOR F AND T				
D2	F		B	T
36"	8"		18"	4 1/2"
39"	8"		21"	5"
42"	8"		24"	5 1/4"
45"	8"		27"	5 1/2"
48"	8"		30"	6"
51"	8 1/2"		33"	6 1/4"
54"	9"		36"	6 1/2"
57"	9 1/4"		39"	7"
60"	9 1/2"		42"	7 1/2"
63"	10"		45"	7 3/4"
66"	10 1/4"		48"	8"
69"	10 3/4"		51"	8 1/2"
72"	11"		54"	9"
78"	11 3/4"		57"	9 1/4"
84"	12 1/2"		60"	9 1/2"
90"	13 1/4"		63"	10"
96"	14"		66"	10 1/2"
102"	15 1/2"		69"	10 3/4"
108"	16"		72"	11"
114"	16 1/2"		78"	11 3/4"
120"	17"		84"	12 1/2"
126"	17"		90"	13 1/4"
132"	17 1/2"		96"	14"
138"	17 1/2"		102"	15 1/2"
144"	18"		108"	16"
			114"	16 1/2"
			120"	17"
			126"	17"
			132"	17 1/2"
			138"	17 1/2"
			144"	18"

TABLE OF BAR SIZES PROJECTED ON R.P.O.		
* D2 OR B	A & B BARS	D OR F BARS
24"–39"	#5 @ 3"	#4 @ 6"
42"–84"	#6 @ 3"	#5 @ 6"
90"–96"	#7 @ 3"	#6 @ 6"

* FOR STRUCTURE WITHOUT MANHOLE REVISE D2 OR B TO READ 12"–39"

CITY OF MISSION VIEJO

JUNCTION STRUCTURE TYPE III

STANDARD PLAN NO.

410

9-23-03

APPROVED RCE 30190 DATE

SHT 3 OF 4

NOTES:

1. VALUES FOR A, B, C, D1, D2 AND L ELEVATION R AND ELEVATION S ARE SHOWN ON PLAN. TABLE OF VALUES FOR F AND T ARE SHOWN ON SHEET 3.

2. IF LATERALS ENTER BOTH SIDES OF JUNCTION STRUCTURE, ACCESS SHAFT SHALL BE LOCATED ON SIDE RECEIVING THE SMALLER LATERAL.

3. CENTER OF MANHOLE SHAFT SHALL BE LOCATED OVER CENTERLINE OF STORM DRAIN WHEN D1 IS 48" OR LESS. IN THIS CASE, PLACE 4-E BARS SYMMETRICALLY AROUND SHAFT 45 DEGREES WITH CENTERLINE.

4. LENGTH OF JUNCTION STRUCTURE MAY BE INCREASED AT OPTION TO MEET PIPE ENDS, BUT ANY CHANGE IN LOCATION OF SPUR MUST BE APPROVED BY THE CITY ENGINEER.

5. DETAIL M. WHEN DEPTH OF MANHOLE FROM STREET TO TOP OF JUNCTION STRUCTURE IS LESS THAN 2'-10 1/2" FROM PAVED STREETS OR 3'-6" FOR UNPAVED STREETS, CONSTRUCT MONOLITHIC SHAFT PER DETAIL M. CONSTRUCTION OF SHAFT AS PER DETAIL M FOR ANY DEPTH OF MANHOLE IS OPTIONAL. WHEN D1 IS 48" OR LESS, CENTER OF SHAFT SHALL BE LOCATED AS PER NOTE 3.

6. REINFORCING STEEL. STRAIGHT BARS, 1 1/2" CLEAR OF FACE OF CONCRETE UNLESS SHOWN OTHERWISE. TIE BARS SHALL BE #4 SPACED 18" ON CENTERS OR CLOSER. STEEL SCHEDULE DETAILED ON PLAN.

7. EMBEDMENT "P" SHALL BE 5" FOR D2=96" OR LESS AND 8" FOR D2 OVER 96".

8. STEPS SHALL BE 3/4" ROUND GALVANIZED STEEL AND ANCHORED NOT LESS THAN 6" IN THE WALLS OF THE STRUCTURE AND SHALL PROJECT A MINIMUM OF 4 INCHES FROM POINT OF EMBEDMENT. UNLESS OTHERWISE SHOWN, THE SPACING SHALL BE 16" OR 17" ON CENTER. THE LOWEST STEP SHALL NOT BE MORE THAN 2 FEET ABOVE THE INVERT.

9. RINGS, REDUCER, AND PIPE FOR ACCESS SHAFT SHALL BE SEATED IN 1:2 MIX MORTAR AND NEATLY PAINTED OR WIPED INSIDE SHAFT.

10. FLOOR OF JUNCTION STRUCTURE SHALL BE STEEL TROWELED TO SPRINGLINE.

11. BODY OF JUNCTION STRUCTURE, INCLUDING SPUR, SHALL BE CONSTRUCTED IN ONE CONTINUOUS OPERATION, EXCEPT THAT A CONSTRUCTION JOINT AT THE SPRINGLINE, WITH LONGITUDINAL KEYWAY, IS PERMITTED.

12. ELEVATIONS APPLIES AT CENTER OF MAIN LINE ON PROLONGATION OF INVERT SPUR.

13. MANHOLES SHALL BE CONSTRUCTED UNLESS SPECIFIED OTHERWISE ON THE PROJECT PLANS. JUNCTION STRUCTURE TYPE III MAY BE USED WITHOUT MANHOLE WHEN ENGINEER DETERMINES SUFFICIENT MEANS OF ACCESS IS AVAILABLE FOR STORM DRAIN MAINTENANCE.

14. WHEN MANHOLE IS OMITTED FROM JUNCTION STRUCTURE TYPE III THE FOLLOWING NOTES SHALL APPLY:
    A. FOR D2 OR B FROM 12" THROUGH 33", F & T SHALL BE 8".
    B. FOR D2 OR B GREATER THAN 33" USE TABLE VALUES HEREON.
    C. OMIT "E", "J", & "H" BARS.
    D. OMIT "D" BARS SPACED AT 3" AND USE SPACING INDICATED ON TABLE.
    E. OMIT "A", "B", & "F" BARS FOR STRUCTURE WITHOUT SIDE INLETS.

CITY OF MISSION VIEJO

MISSION VIEJO CALIFORNIA 1988

JUNCTION STRUCTURE TYPE III

STANDARD PLAN NO.

410

9-23-03

APPROVED RCE 30190 DATE

SHT 4 OF 4

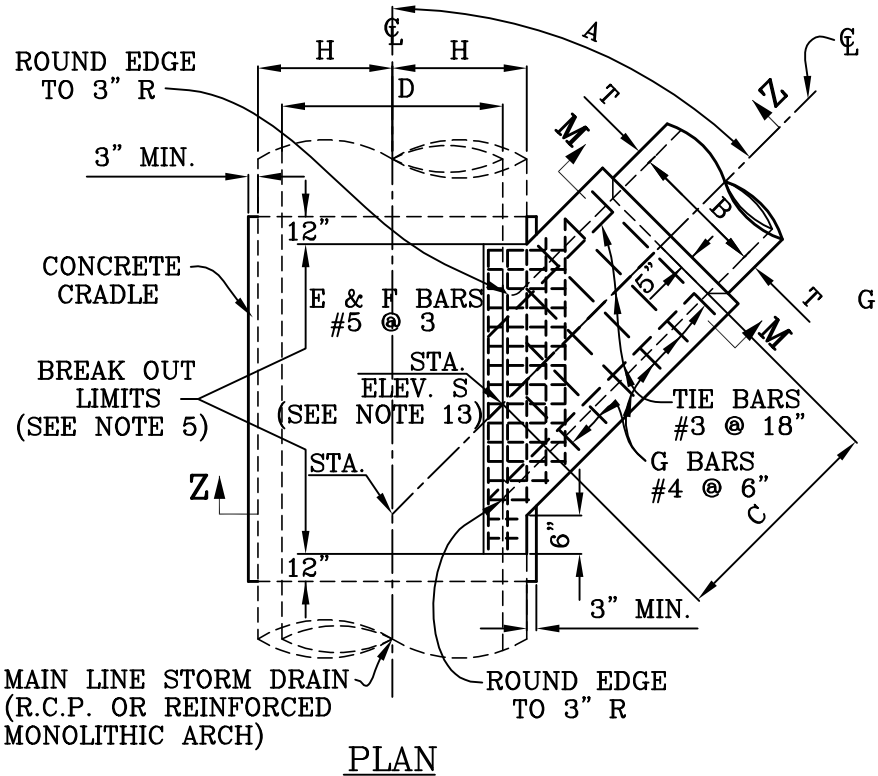

PLAN

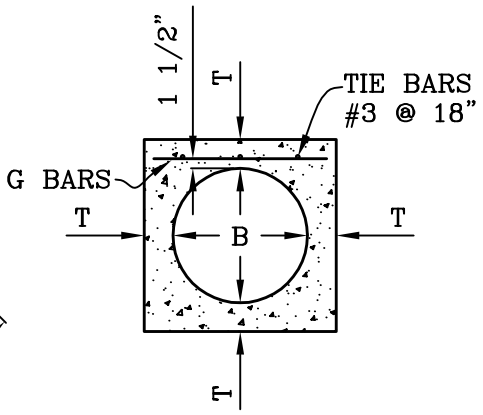

SECTION M–M

TABLE OF VALUES FOR T	
B	T
12"	6"
15"	6"
18"	6"
21"	6"
24"	7"
27"	7"
30"	7"
33"	7"
36"	7"
39"	7"

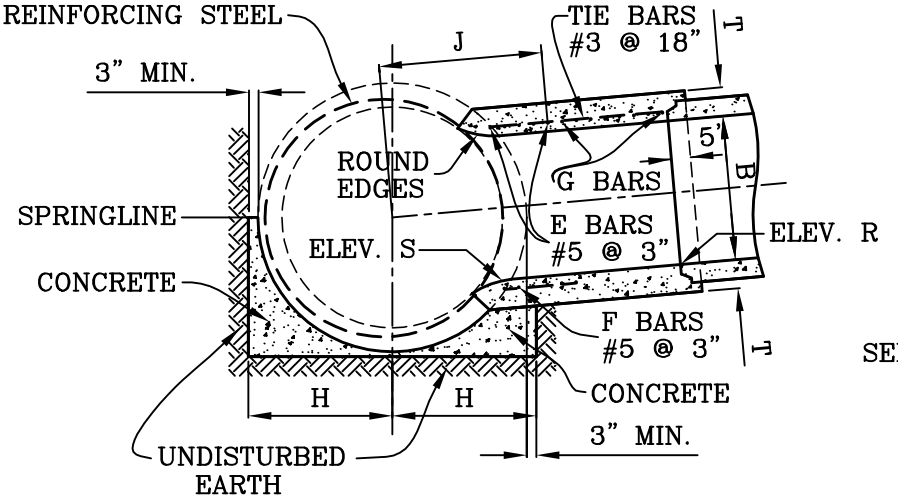

SECTION Z–Z

SEE NOTES ON SHEETS 2 AND 3

CITY OF MISSION VIEJO

JUNCTION STRUCTURE TYPE IV

STANDARD PLAN NO. 411

APPROVED RCE 30190 DATE 9-23-03

SHT 1 OF 3

NOTES:

1. JUNCTION STRUCTURE TYPE IV SHALL BE USED ONLY WHEN SUFFICIENT MEANS OF ACCESS IS AVAILABLE FOR STORM DRAIN MAINTENANCE.
2. JUNCTION STRUCTURE TYPE IV IS TO BE USED WHEN OD OF B IS GREATER THAN 1/2 THE ID OF D OR B IS LARGER THAN 24". B SHALL NOT EXCEED 3/4 OF D OR 39". WHERE B IS LESS THAN 24" USE TYPE IV OR TYPE VI. WHERE B EXCEEDS 3/4 D OR 39", USE JUNCTION STRUCTURE TYPE III WITHOUT MANHOLE.
3. VALUES OF A, B, C, AND D ARE SHOWN ON PROJECT DRAWINGS. ELEVATION "R" AND ELEVATION "S" ARE SHOWN WHEN REQUIRED PER NOTE 12.
4. ELEVATION "S" APPLIES AT INSIDE WALL OF STRUCTURE.
5. BREAKOUT LIMITS SHALL BE DETERMINED AS FOLLOW:
   UPSTREAM LIMIT–THE INTERSECTION OF THE OUTSIDE OF THE SPUR WALL WITH THE MAIN LINE PIPE WALL.
   DOWNSTREAM LIMIT–6" DOWNSTREAM OF THE INTERSECTION OF THE OUTSIDE OF THE SPUR WALL WITH THE MAIN LINE PIPE WALL.
   THE OPENING SHALL BE RECTANGULAR AND CUT NORMAL TO THE PIPE SURFACE WITHOUT DAMAGING REINFORCING STEEL. PROVIDE A CONCRETE ENCASEMENT 1' ABOVE THE TOP OF THE MAIN LINE PIPE TO THE LIMITS OF THE CONCRETE CRADLE IF A JOINT IN THE MAIN LINE PIPE FALLS WITHIN THE LIMIT OF THE CRADLE.
6. THE TRANSVERSE REINFORCEMENT IN PIPE SHALL BE CUT AT CENTER OF OPENING AND BENT INTO TOP AND BOTTOM SLABS OF SPUR.
7. THE MAIN LINE PIPE SHALL BE CRADLED AND ENCASED IN 1:3:5 MIX OF CONCRETE, EXTENDING LONGITUDINALLY 12" BEYOND THE LIMITS OF BREAKOUT (SEE NOTE 5); AND TRANSVERSELY A DISTANCE OF H ON EACH SIDE OF THE CENTERLINE OF PIPE. H=1/2 O.D. OF PIPE + 3" MIN. CRADLE MAY BE OMITTED ON SIDE OPPOSITE LATERAL INLET WHEN CONSTRUCTED IN CONNECTION WITH EXISTING STORM DRAIN.
8. REINFORCING STEEL SHALL BE PLACED 1 1/2" CLEAR FROM FACE OF CONCRETE, UNLESS OTHERWISE SHOWN.
9. E AND F BARS SHALL BE CARRIED TO A POINT NOT LESS THAN J DISTANCE FROM CENTERLINE. J = 7/12D + 6".
10. FLOOR OF STRUCTURE SHALL BE STEEL TROWELED TO SPRINGLINE.
11. WHEN JUNCTION STRUCTURE TYPE IV IS SPECIFIED WITH REINFORCED MONOLITHIC ARCH STORM DRAIN, VALUE D SHALL REFER TO THE CLEAR SPAN OF THE ARCH. REINFORCING STEEL SHALL BE CUT AND BENT INTO JUNCTION STRUCTURE IN THE SAME MANNER AS FOR PIPE. CONCRETE CRADLE UNDER REINFORCED MONOLITHIC ARCH IS NOT REQUIRED.
12. SIDE INLET PIPE SHALL ENTER MAIN LINE RADIALLY WHEN ELEVATIONS "R" AND "S" ARE NOT SHOWN ON PROJECT DRAWINGS. WHEN SIDE INLET PIPE ENTERS MAIN LINE OTHER THAN RADIALLY, ELEVATION "S" SHALL BE SHOWN ON PROJECT DRAWINGS AND SIDE INLET PIPE SHALL BE LAID ON A STRAIGHT GRADE FROM ELEVATION "S" TO CATCH BASIN OR GRADE BREAK IN LINE. ELEVATION "R" SHALL BE SHOWN ON PROJECT DRAWINGS ONLY WHEN STUB IS TO BE PROVIDED IN MAIN LINE FOR FUTURE SIDE INLET PIPE.

(NOTES CONTINUED ON SHEET 3)

CITY OF MISSION VIEJO

MISSION VIEJO CALIFORNIA 1988	JUNCTION STRUCTURE TYPE IV	STANDARD PLAN NO. 411
	Robert Henderson 9-23-03	
	APPROVED RCE 30190 DATE	SHT 2 OF 3

NOTES:

13. STATIONS SPECIFIED ON DRAWINGS APPLY AT THE INTERSECTION OF CENTERLINES OF MAIN LINE AND LATERALS, EXCEPT THAT STATIONS FOR CATCH BASIN CONNECTOR PIPE APPLY AT INSIDE OF STRUCTURE.

CITY OF MISSION VIEJO

	JUNCTION STRUCTURE TYPE IV	STANDARD PLAN NO. 411
	9-23-03 APPROVED RCE 30190 DATE	SHT 3 OF 3

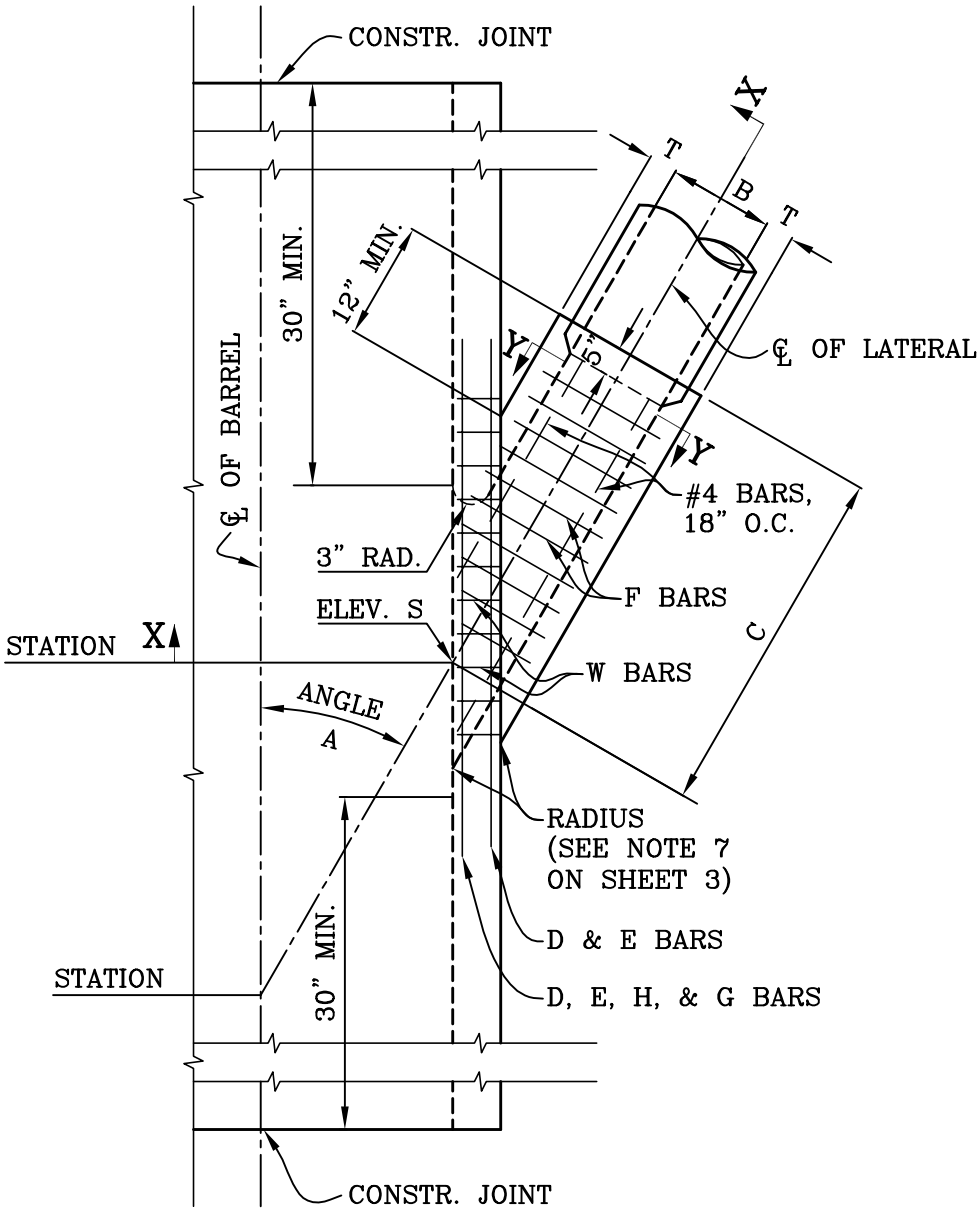

PLAN

SEE NOTES ON SHEET 3

CITY OF MISSION VIEJO

JUNCTION STRUCTURE–RCB
TYPE V

STANDARD PLAN NO.

412

9-23-03

APPROVED RCE 30190 DATE

SHT 1 OF 3

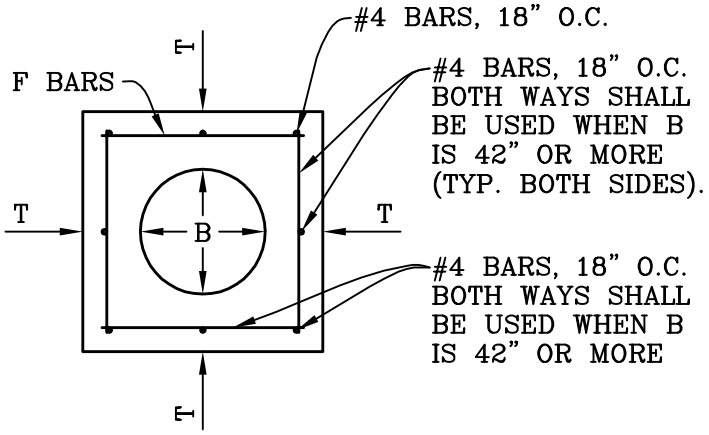

SECTION Y–Y

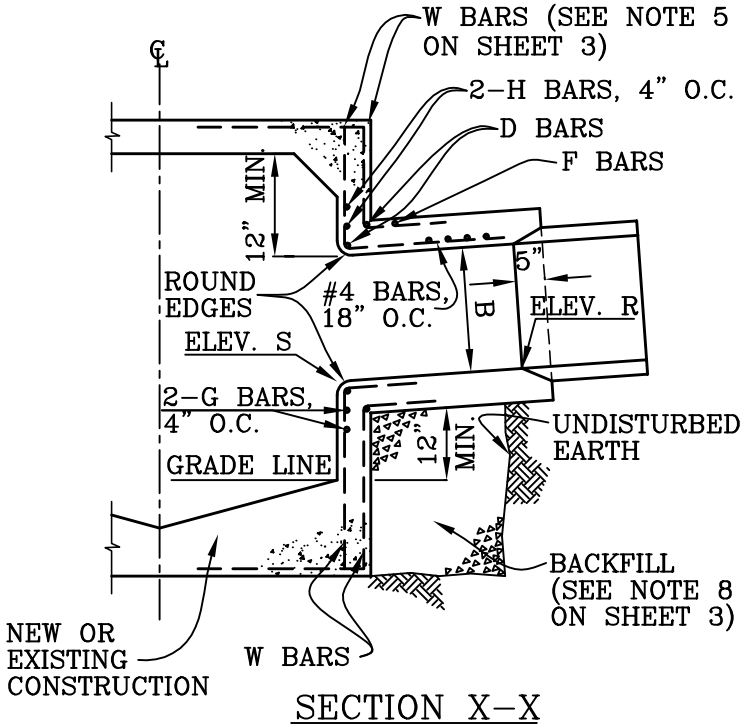

SECTION X–X

TABLE
FOR DIMENSIONS AND BAR SIZES

B (INCHES)	T (INCHES)	D.E.H. & G BARS	F BARS
12	4	# 5	# 4 @ 6" O.C.
15	6		
18	6		
21	6		
24	6		
27	6		
30	6		
33	8		
36	8		
39	8		
42	8	# 6	# 5 @ 6" O.C.
45	8		
48	8		
51	10		
54	10		
57	10		
60	10		
63	10		
66	12		
69	12		
72	12		
78	12		
84	14		
90	14	# 7	#6@6" O.C.

SEE SHEET 3 FOR NOTES

CITY OF MISSION VIEJO

JUNCTION STRUCTURE TYPE V

STANDARD PLAN NO.

412

APPROVED | RCE 30190 | DATE 9-23-03

SHT 2 OF 3

NOTES:

1. JUNCTION STRUCTURE TYPE V MAY BE USED WHEN B=96" OR LESS, ANGLE A=30 DEGREES OR MORE, BARREL WIDTH OF THE R.C.B. IS 20 FT. OR LESS, AND COVER OVER R.C.B. IS 10 FT. OR LESS.
2. VALUES OF B, C, ANGLE A, ELEVATIONS R AND S, AND STATION POINTS ARE AS SHOWN ON THE PLANS.
3. ALL STEEL REINFORCEMENT SHALL BE 1-1/2" CLEAR UNLESS OTHERWISE NOTED.
4. FOR PIPE SIZES NOT SHOWN, USE TABLED VALUES FOR NEXT LARGER PIPE.
5. W BARS ARE OF SIZE AND SPACING SPECIFIED FOR WALL STEEL ON PLAN, AND SHALL BE CUT IN CENTER OF OPENING AND BENT INTO TOP AND BOTTOM OF JUNCTION STRUCTURE.
6. FLOOR OF JUNCTION STRUCTURE SHALL BE STEEL TROWELED TO SPRINGLINE.
7. RADIUS VARIES FROM 3" AT ANGLE = 90 DEGREES TO RADIUS = B (36" MAX.) WHEN ANGLE A = 45 DEGREES OR LESS.
8. BACKFILL UNDER STRUCTURE WITH SLURRY CONTAINING 1-1/2 SACKS P.C.C./C.Y. BACKFILL MAY BE OMITTED IF STRUCTURE IS LAID ON UNDISTURBED EARTH TO STORM DRAIN WALL.
9. STORM DRAIN CONNECTOR PIPES SHALL BE 18" MINIMUM DIAMETER.
10. THE FLOWLINE OF ALL ENTRIES SHALL BE MADE IN THE LOWER 1/3 OF THE STRUCTURE.

CITY OF MISSION VIEJO

MISSION VIEJO CALIFORNIA 1988	JUNCTION STRUCTURE TYPE V	STANDARD PLAN NO. 412
	Kevin Henderson 9-23-03	
	APPROVED RCE 30190 DATE	SHT 3 OF 3

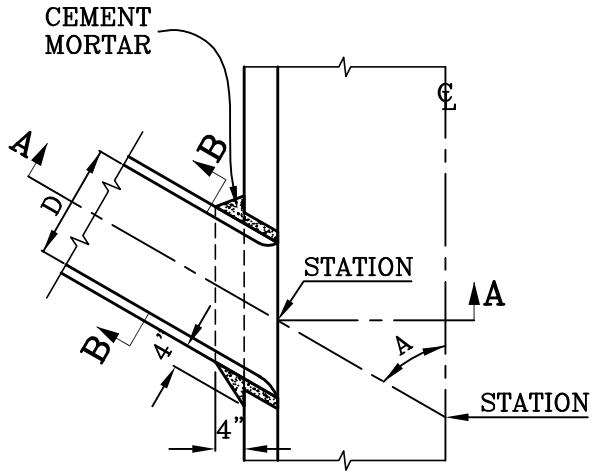

PLAN
CASE 1

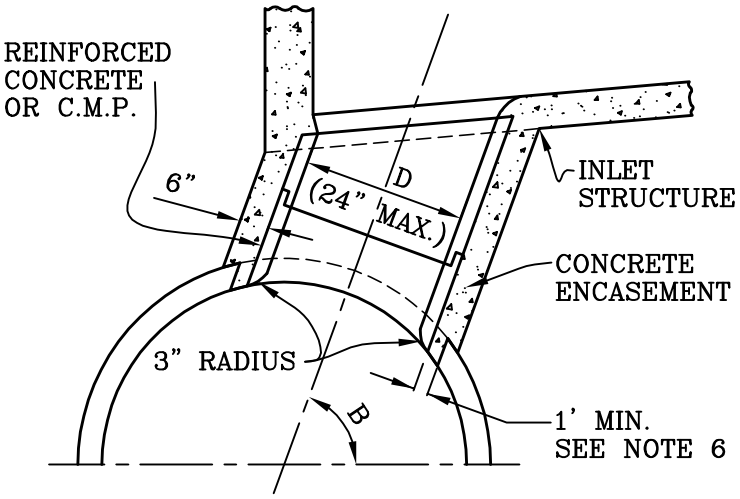

CASE 2

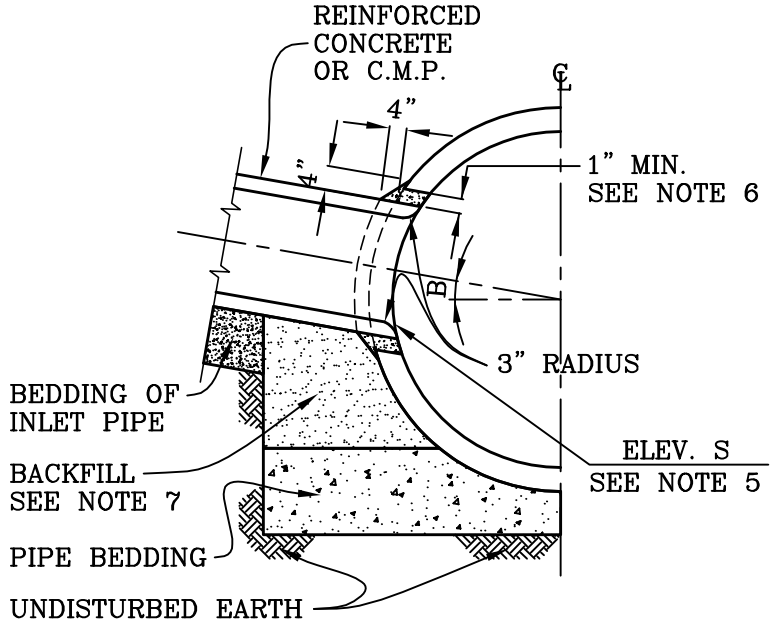

SECTION A–A

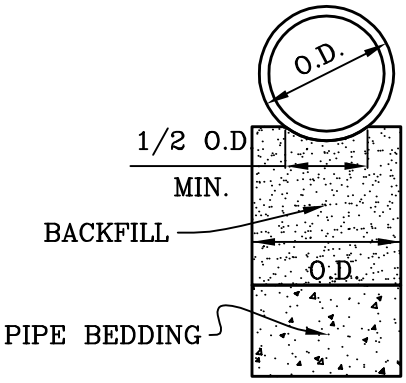

SECTION B–B

SEE NOTES ON SHEET 2

CITY OF MISSION VIEJO

JUNCTION STRUCTURE
TYPE VI

STANDARD PLAN NO.
413

APPROVED RCE 30190 DATE 9-23-03

SHT 1 OF 2

NOTES:

1. ALL CORRUGATED METAL PIPE AND FITTINGS SHALL BE GALVANIZED.
2. ANGLE A SHALL BE SHOWN ON PLANS AND SHALL BE BETWEEN 45 DEGREES AND 90 DEGREES AND D SHALL BE 24" OR LESS.
3. IN NO CASE SHALL THE OUTSIDE DIAMETER OF THE SIDE INLET PIPE EXCEED ONE-HALF THE INSIDE DIAMETER OF THE MAIN STORM DRAIN.
4. IF ANGLE B IS 45 DEGREES OR LESS, USE CASE 1. IF ANGLE B IS GREATER THAN 45 DEGREES, USE CASE 2.
5. CENTERLINE OF SIDE INLET SHALL BE ON RADIUS OF MAIN STORM DRAIN EXCEPT WHERE ELEVATION S IS SHOWN ON PROJECT DRAWINGS.
6. THE OPENING INTO THE MAIN STORM DRAIN SHALL BE THE OUTSIDE DIAMETER OF THE INLET PIPE PLUS 1" MINIMUM OR 3" MAXIMUM.
7. BACKFILL WITH SLURRY CONTAINING MINIMUM 1-1/2 SACKS P.C.C./C.Y.

CITY OF MISSION VIEJO

JUNCTION STRUCTURE
TYPE VI

STANDARD PLAN NO.
413

9-23-03

APPROVED RCE 30190 DATE

SHT 2 OF 2

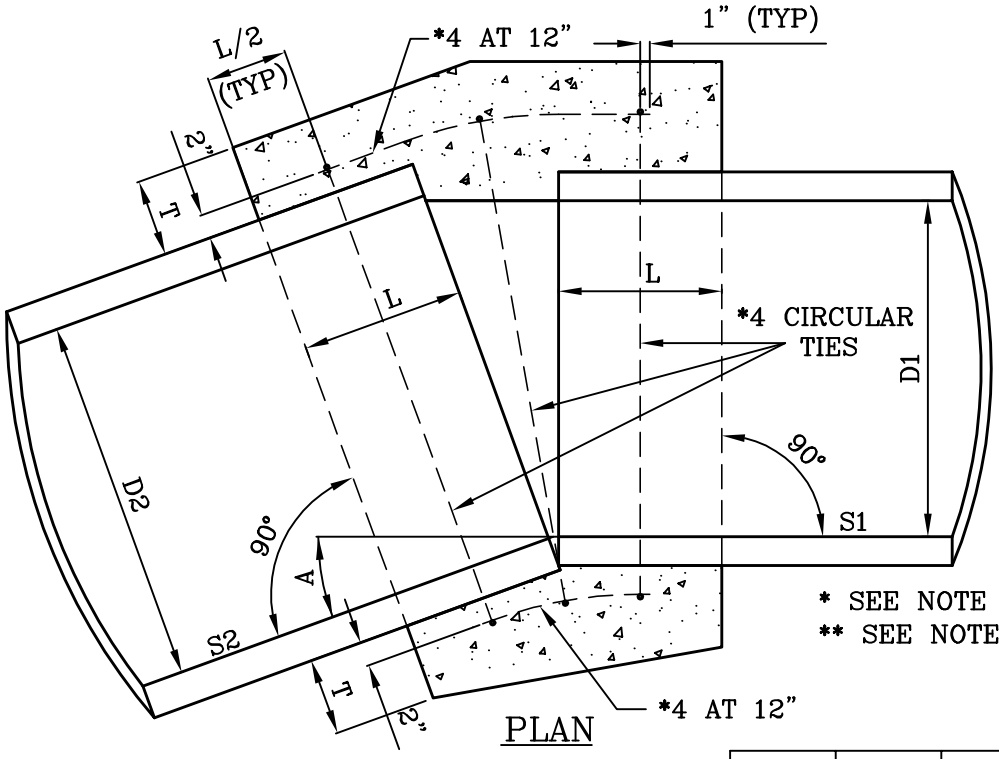

PLAN

* SEE NOTE 4 ON SHT.2
** SEE NOTE 13 ON SHT. 2

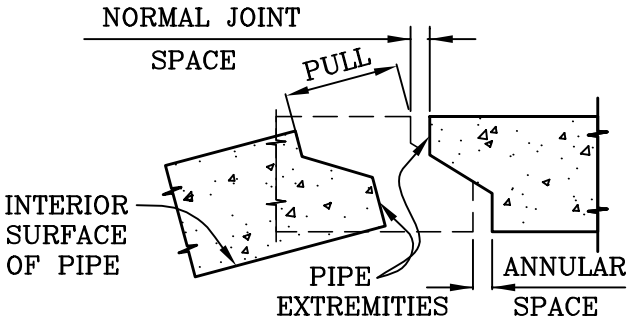

DETAIL A

TYPICAL JOINT FOR REINFORCED CONCRETE PIPE

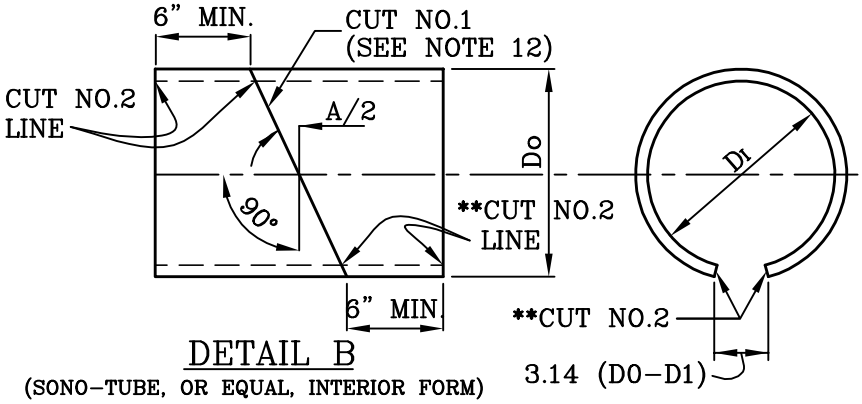

DETAIL B

(SONO-TUBE, OR EQUAL, INTERIOR FORM)

D(IN.)	L(IN.)	T(IN.)	PERMITTED DEFLECTION ANGLE
12	12	4	2° 14'
15	12	4	1° 55'
18	12	5	1° 40'
21	12	5	1° 29'
24	12	6	1° 20'
27	12	7	1° 13'
30	12	7	1° 07'
33	18	8	1° 01'
36	18	9	1° 01'
39	18	9	1° 09'
42	18	9	1° 05'
45	18	10	1° 01'
48	18	10	0° 58'
51	18	10	0° 55'
54	18	10	0° 52'
57	18	10	0° 49'
60	21	11	0° 45'
66	21	11	0° 43'

CITY OF MISSION VIEJO

CONCRETE COLLAR

STANDARD PLAN NO.

414

APPROVED RCE 30190 DATE 9-23-03

SHT 1 OF 2

NOTES:

1. A CONCRETE COLLAR IS REQUIRED WHENEVER D1 IS UNEQUAL TO D2 OR THE PERMITTED DEFLECTION AT A PIPE JOINT IS EXCEEDED; THAT IS WHEN ANGLE "A" IS GREATER THAN THE PERMITTED DEFLECTION ANGLE (SEE TABLE ON SHEET 1).
2. CONCRETE COLLAR SHALL NOT BE CONSTRUCTED ON MAIN LINE STORM DRAINS UNLESS SHOWN ON THE PLANS OR OTHERWISE REQUIRED BY THE CITY ENGINEER.
3. REINFORCING SHALL BE USED WHERE THE PIPE DIAMETER IS GREATER THAN 21 INCHES AND ON ALL PIPES WHERE THE PULL BETWEEN THE EXTREMITIES (SEE DETAIL ON SHEET 1) IS 2 1/2 INCHES OR LARGER.
4. CIRCULAR TIES:

PIPE DIAMETER	SPACE BETWEEN PIPE EXTREMITIES	NO. OF CIRCULAR TIES
21" OR LESS	2-1/2"	3
24" TO 30"	2-1/2" OR LESS	3
33" TO 57"	2-1/2" OR LESS	4
60" TO 66"	2-1/2" OR LESS	5

WHERE THE SPACE BETWEEN THE PIPE EXTREMITIES EXCEEDS 2 1/2 INCHES, THE NUMBER OF CIRCULAR TIES SHALL BE INCREASED TO MAINTAIN A MAXIMUM SPACING OF 6 INCHES CENTER TO CENTER. CIRCULAR TIES SHALL HAVE A DIAMETER 5 INCHES GREATER THAN THE OUTSIDE DIAMETER OF THE LARGER PIPE.

5. FOR PIPES LARGER THAN 66 INCHES IN DIAMETER, A SPECIAL COLLAR DETAIL SHALL BE DELINEATED ON THE PROJECT PLANS.
6. WHERE THE PIPE IS 21 INCHES OR LESS IN DIAMETER, AN INTERIOR FORM OF UNSEALED SONO-TUBE, OR EQUAL (SEE DETAIL B ON SHEET 1), SHALL BE USED TO PROVIDE A SMOOTH INTERIOR JOINT. THE PAPER FORM MAY BE LEFT IN PLACE. WHEN THE PIPE IS INCHES OR LARGER, A REMOVABLE INTERIOR FORM SHALL BE USED OR THE INTERIOR JOINT SHALL BE COMPLETELY FILLED WITH MORTAR AND NEATLY POINTED.
7. WHERE PIPES OF DIFFERENT DIAMETERS ARE JOINED WITH A CONCRETE COLLAR, L SHALL BE THAT OF THE LARGER PIPE AND THE EXTERNAL DIAMETER OF THE COLLAR SHALL BE EQUAL TO THE OUTSIDE DIAMETER OF LARGER PIPE PLUS 2T FOR THE LARGER PIPE. A CONCRETE COLLAR SHALL NOT BE CONSTRUCTED CONNECTING A LARGER DIAMETER PIPE DOWN STREAM UNLESS SHOWN ON THE IMPROVEMENT PLANS OR REQUIRED BY THE CITY ENGINEER.
8. THE VALUE OF ANGLE "A" SHALL BE SHOWN ON THE IMPROVEMENT PLANS.
9. WHERE THE SLOPE OF THE UPSTREAM PIPE IS GREATER THAN THE SLOPE OF THE DOWNSTREAM PIPE, JOIN SOFFITS. WHERE THE SLOPE OF THE UPSTREAM PIPE IS LESS THAN THE SLOPE OF THE DOWNSTREAM PIPE, JOIN INVERTS.
10. BEVELED PIPE MAY BE USED IN LIEU OF A CONCRETE COLLAR IF APPROVED BY THE CITY ENGINEER.
11. FOR PIPE SIZES NOT LISTED IN THE TABLE, USE VALUES L, T, & A FOR THE NEXT LARGER SIZE LISTED.
12. CUT NO. 1: SAW THE TUBE AT AN ANGLE OF A/2 WITH THE TRAVERSE PLANE. REVERSE ONE SECTION AND TAPE BOTH SECTIONS TOGETHER, FORMING THE DEFLECTION ANGLE "A".
13. CUT NO. 2: SAW THE TUBE LONGITUDINALLY, REMOVING A STRIP 3.14 ($D_o - D_i$) INCHES WIDE ON THE SIDE OPPOSITE THE OPEN JOINT. BEND THE ENDS OF THE CUT TOGETHER AND INSERT THE TUBE IN THE PIPE.

CITY OF MISSION VIEJO

CONCRETE COLLAR

STANDARD PLAN NO.

414

Robert Henderson 9-23-03

APPROVED RCE 30190 DATE

SHT 2 OF 2

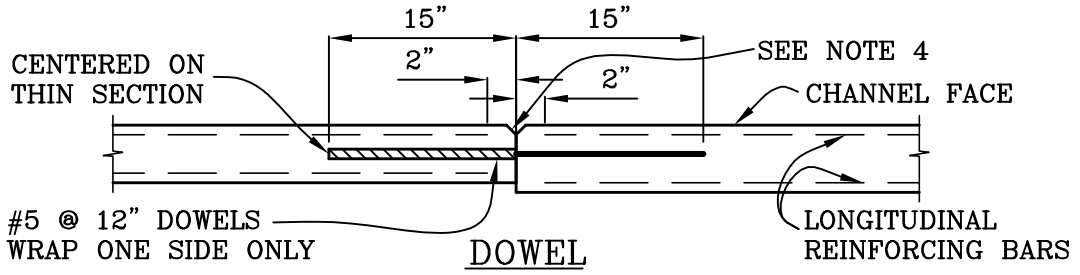

DOWEL

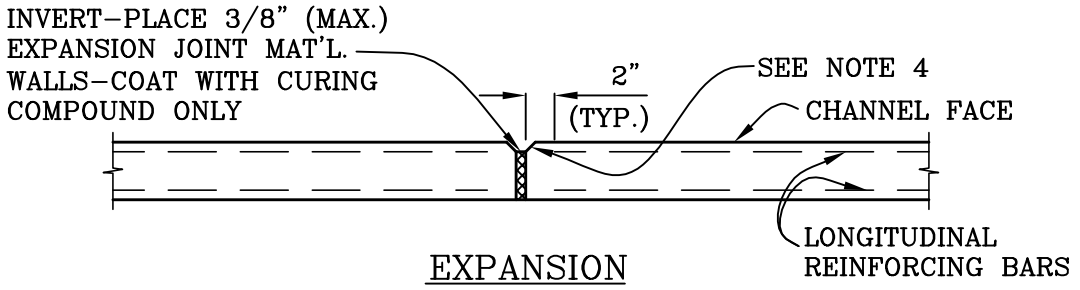

EXPANSION

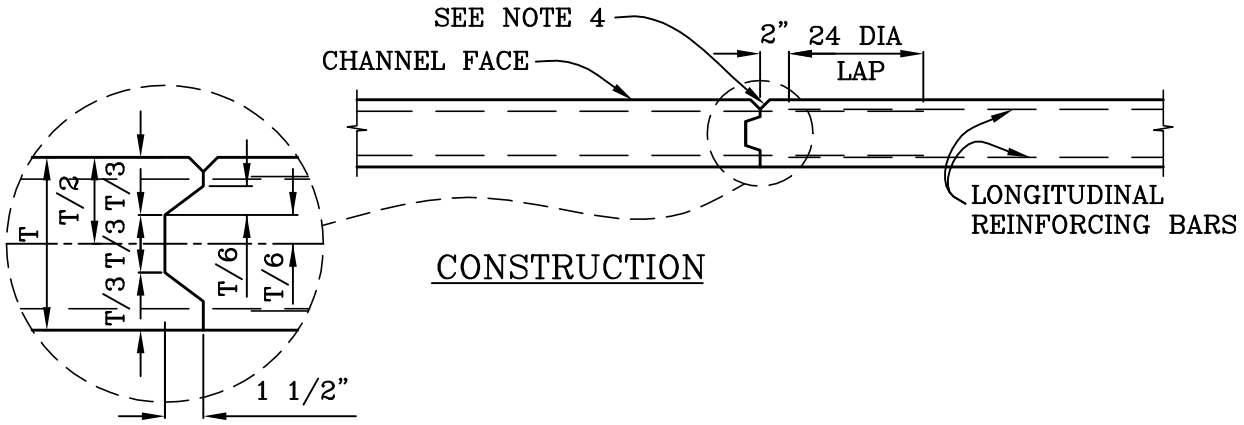

CONSTRUCTION

NOTES:

1. EXPANSION JOINT SHALL BE USED FOR R.C. CHANNEL AT INTERVALS NOT LESS THAN 10' OR MORE THAN 50' UNLESS OTHERWISE NOTED.
2. ALL JOINTS SHALL BE IN THE SAME PLANE FOR THE ENTIRE STRUCTURE AND ON THE RADIAL FOR CURVED SECTIONS. NO STAGGERING OF JOINTS IS PERMITTED.
3. CONSTRUCTION JOINTS SHALL BE USED FOR R.C. BOX CULVERTS AT INTERVALS NOT LESS THAN 10' OR MORE THAN 50'.
4. JOINT FINISH FOR CHANNEL FACE SHALL BE CHAMFERED 1/2" ON WALLS AND DECKS AND ROUNDED WITH EDGER TOOL ON INVERT.
5. DOWEL JOINTS SHALL BE LOCATED AS SHOWN ON PLANS.

CITY OF MISSION VIEJO

MISSION VIEJO CALIFORNIA	TRANSVERSE JOINT DETAILS	STANDARD PLAN NO. 415
	Robert Henderson 9-23-03	
	APPROVED RCE 30190 DATE	SHT 1 OF 1

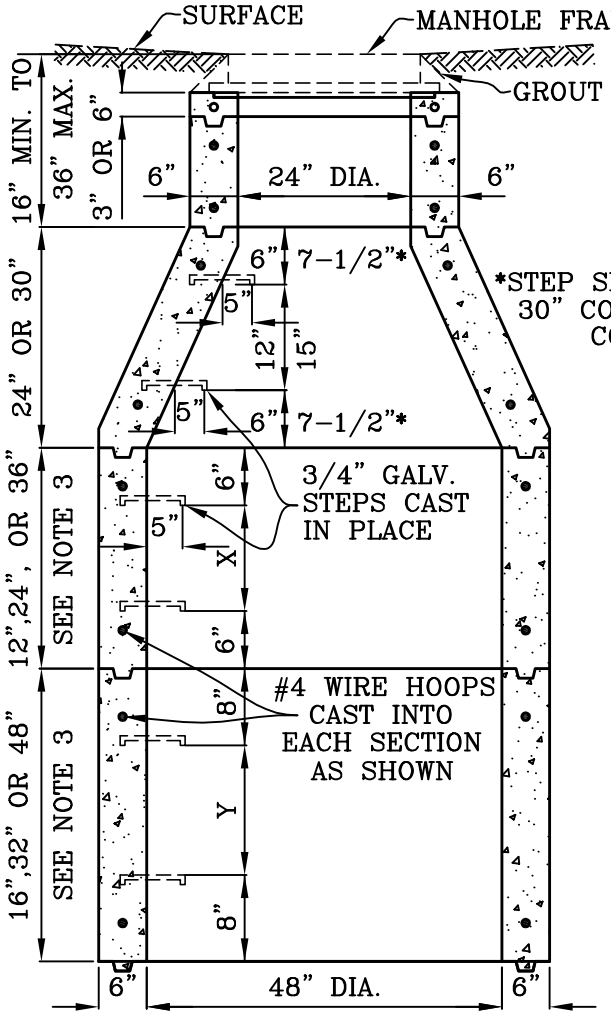

48" I.D. CONCENTRIC CONC. MANHOLE
TYPICAL SECTION

X=12" INTERVALS IF MORE THAN ONE STEP
Y=16" INTERVALS IF MORE THAN ONE STEP

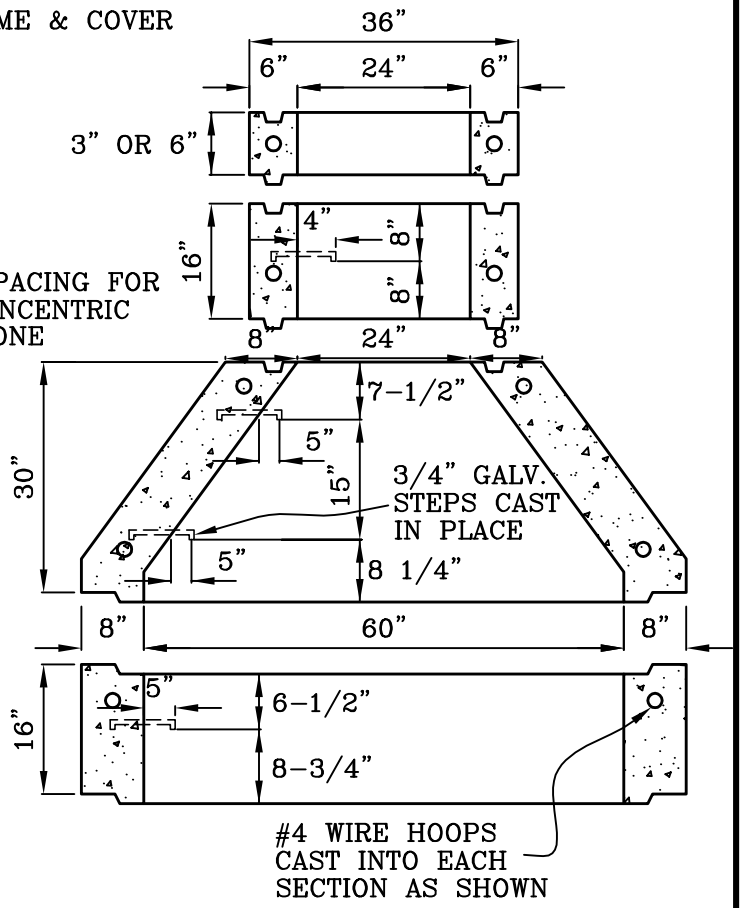

60" I.D. CONCENTRIC CONC. MANHOLE
TYPICAL SECTION

CITY OF MISSION VIEJO

NON-REINFORCED CONCRETE CONCENTRIC CONE MANHOLE

STANDARD PLAN NO.

416

APPROVED | RCE 30190 | DATE 9-23-03

SHT 1 OF 2

NOTES:

1. CONSTRUCTION SHALL BE IN ACCORDANCE WITH STANDARD SPECIFICATIONS FOR PUBLIC WORKS CONSTRUCTION.
2. SEE STD. PLAN 422 FOR MANHOLE STEP DETAILS. MAXIMUM SPACING = 17".
3. THE MANHOLE PIPES AND GRADE RINGS SHALL BE ARRANGED IN ORDER OF LONGER TO SHORTER LENGTHS FROM BOTTOM TO TOP.
4. MANHOLE DETAILS SHALL BE SUBMITTED TO THE CITY ENGINEER FOR APPROVAL.
5. PAVEMENT SURFACE SHALL BE FINISHED A MINIMUM OF 1/8" ABOVE MANHOLE FRAME.
6. TOP OF CONE SHALL BE PLACED A MINIMUM OF 6" BELOW BOTTOM OF ROADWAY STRUCTURAL SECTION OR A MINIMUM OF 16" BELOW FINISH GRADE, WHICHEVER IS GREATEST.
7. SEE STD. PLAN 424 FOR MANHOLE FRAME AND COVER.

CITY OF MISSION VIEJO

NON-REINFORCED CONCRETE CONCENTRIC CONE MANHOLE

STANDARD PLAN NO.

416

Robert Henderson 9-23-03

APPROVED RCE 30190 DATE

SHT 2 OF 2

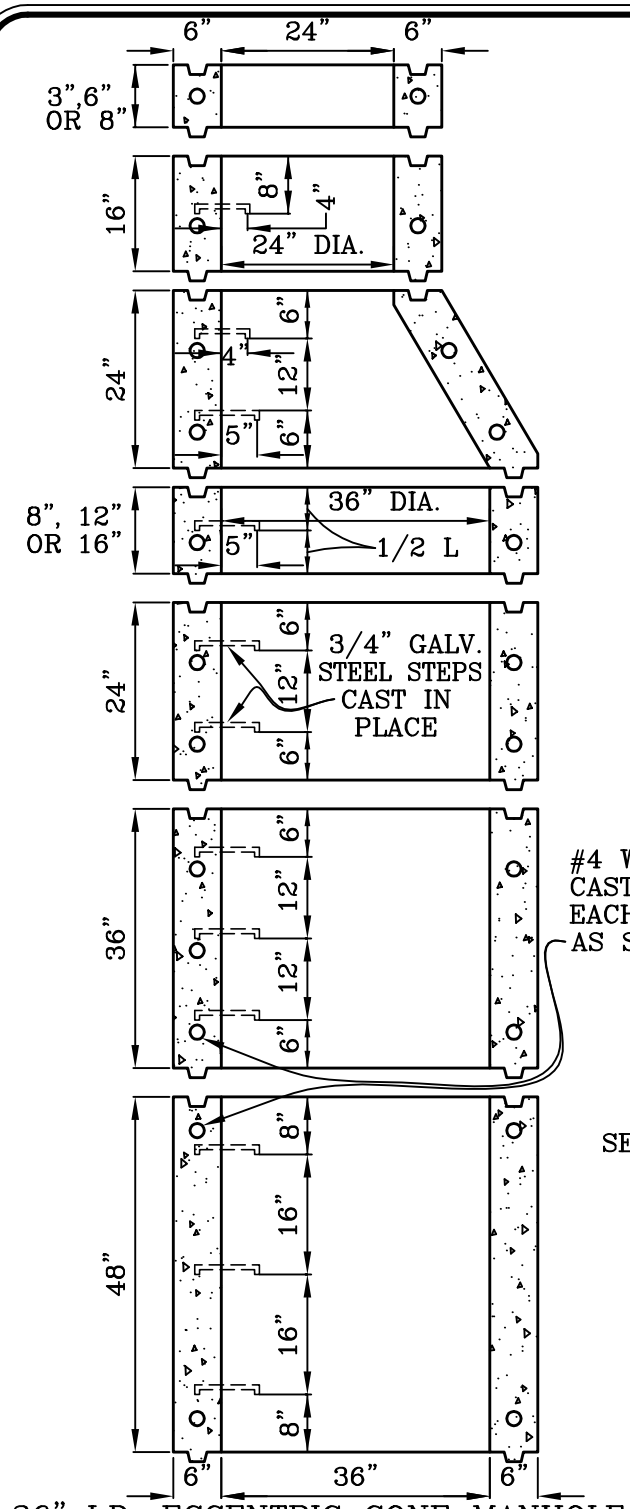

36" I.D. ECCENTRIC CONE MANHOLE
TYPICAL SECTION

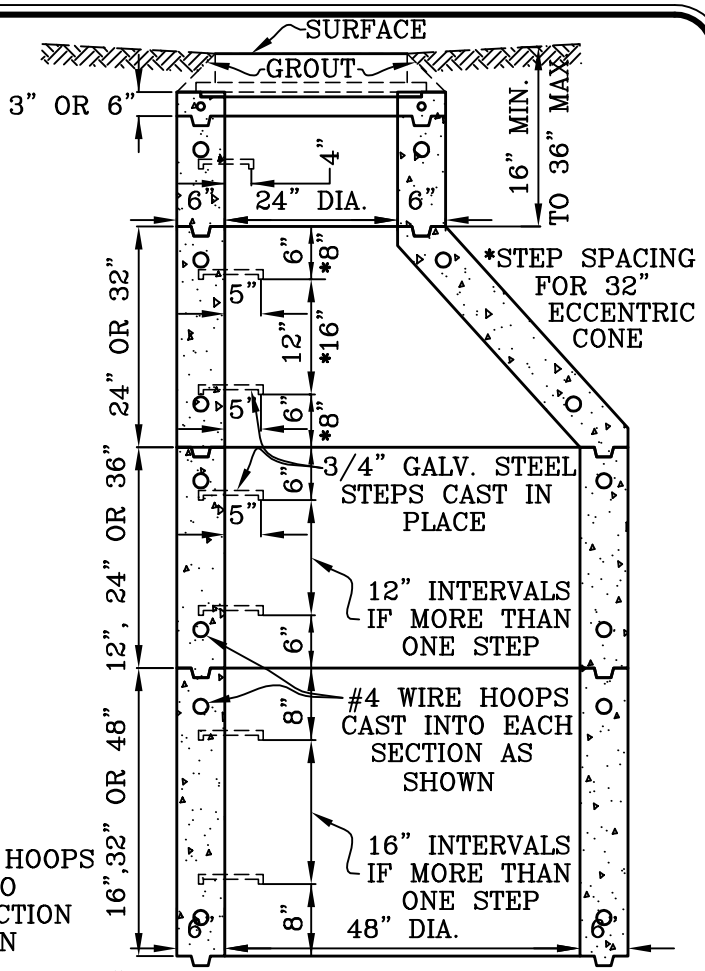

48" I.D. ECCENTRIC CONE MANHOLE
TYPICAL SECTION

SEE SHEET 2 OF 2 OF STD. PLAN 416 FOR NOTES.

CITY OF MISSION VIEJO

	NON–REINFORCED CONCRETE ECCENTRIC CONE MANHOLE	STANDARD PLAN NO. 417
	APPROVED RCE 30190 DATE 9-23-03	SHT 1 OF 1

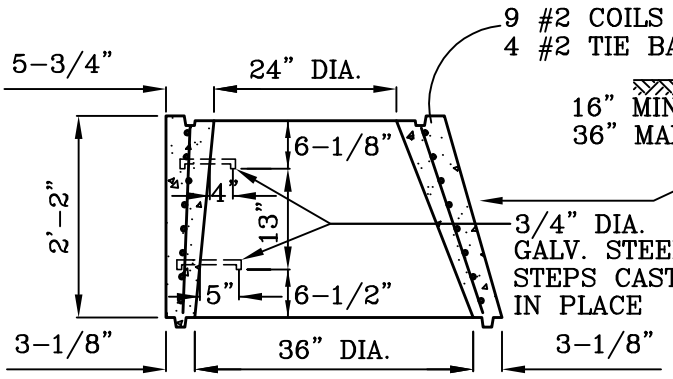

36" x 24" ECCENTRIC CONE

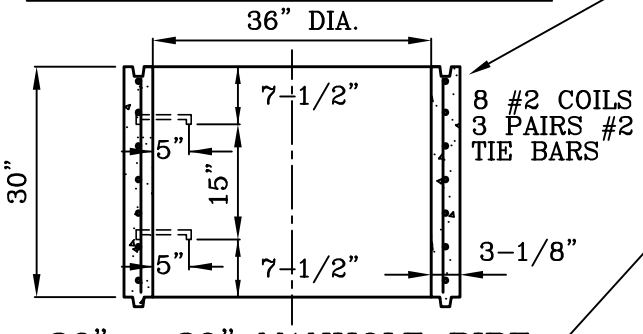

36" x 30" MANHOLE PIPE

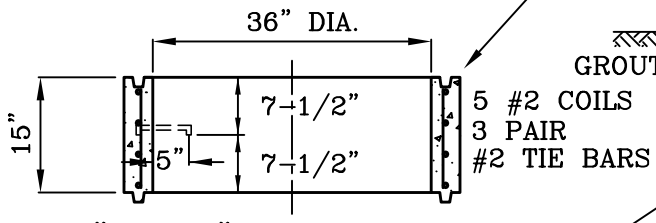

36" x 15" MANHOLE PIPE

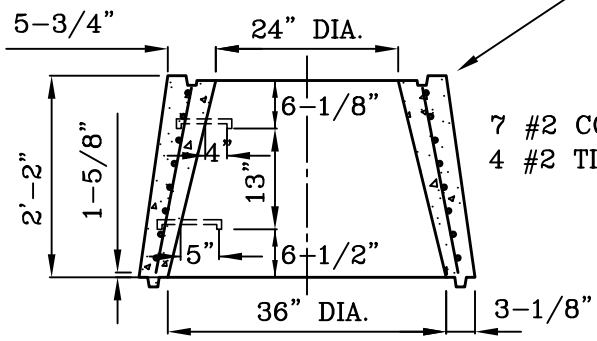

36" x 24" CONCENTRIC CONE

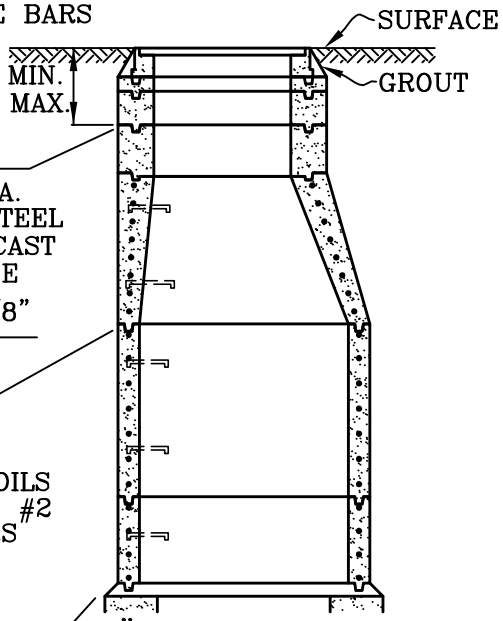

36" I.D. ECCENTRIC CONE MANHOLE TYPICAL SECTION

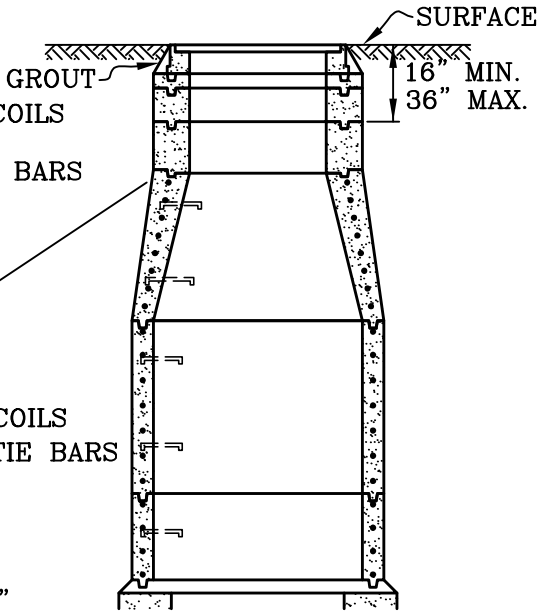

36" I.D. CONCENTRIC CONE MANHOLE TYPICAL SECTION

SEE SHEET 2 OF 2 OF STD. PLAN 426 FOR NOTES.

CITY OF MISSION VIEJO

36" REINFORCED CONCRETE MANHOLE

STANDARD PLAN NO.

418

Roger Henderson 9-23-03

APPROVED RCE 30190 DATE

SHT 1 OF 2

NOTES:

1. SEE STD. PLAN 424 FOR MANHOLE FRAME AND COVER DETAILS.
2. SEE STD. PLAN 422 FOR MANHOLE STEP DETAILS. MAX. SPACING = 17".
3. CONSTRUCTION SHALL BE IN ACCORDANCE WITH STANDARD SPECIFICATIONS FOR PUBLIC WORKS CONSTRUCTION.
4. THE MANHOLE PIPES AND GRADE RINGS SHALL BE ARRANGED IN ORDER OF LONGER TO SHORTER LENGTHS FROM BOTTOM TO TOP.
5. MANHOLE DETAILS SHALL BE SUBMITTED TO THE CITY ENGINEER FOR APPROVAL.
6. PAVEMENT SHALL BE FINISHED A MINIMUM OF 1/8" ABOVE THE MANHOLE FRAME.
7. TOP OF CONE SHALL BE PLACED A MINIMUM OF 6" BELOW BOTTOM OF ROADWAY STRUCTURAL SECTION OR A MINIMUM OF 16" BELOW FINISH GRADE, WHICHEVER IS GREATER.

CITY OF MISSION VIEJO

36" REINFORCED CONCRETE MANHOLE

STANDARD PLAN NO.

418

9-23-03

APPROVED RCE 30190 DATE

SHT 2 OF 2

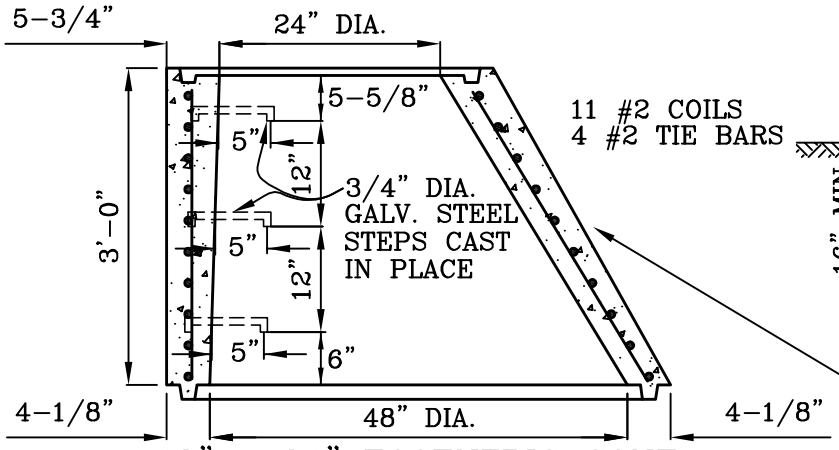

48" x 24" ECCENTRIC CONE

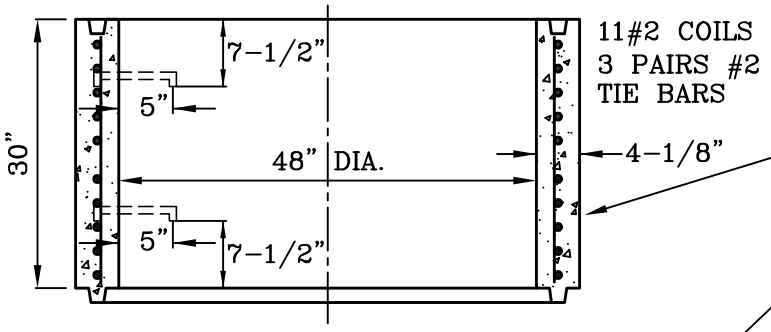

48" x 30" MANHOLE PIPE

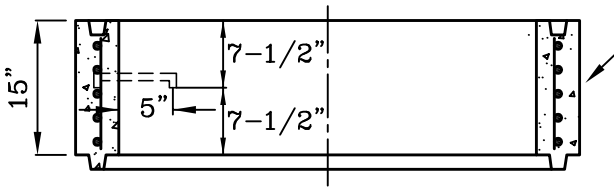

5 #2 COILS
3 PAIR #2 TIE BARS

48" x 30" MANHOLE PIPE

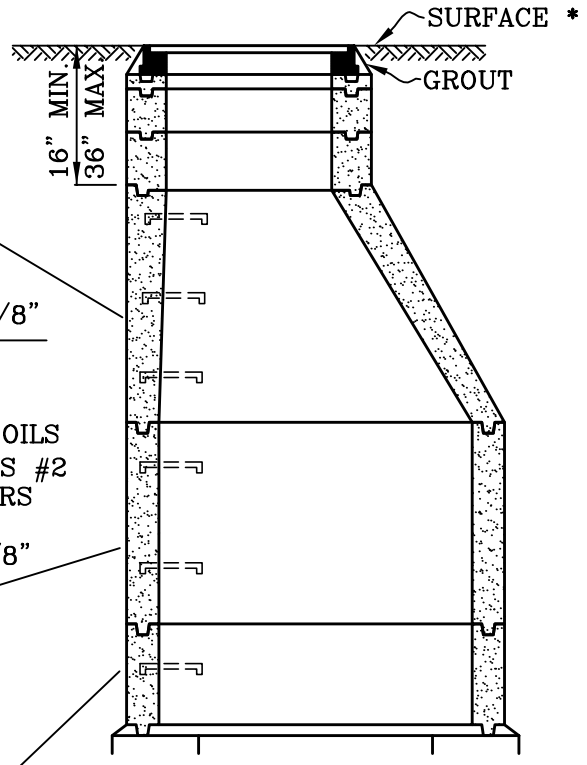

TYPICAL SECTION 48" I.D.
ECCENTRIC CONE MANHOLE

* PAVEMENT SHALL BE FINISHED MINIMUM 1/8" ABOVE MANHOLE FRAME.

SEE SHEET 2 OF 2 OF STD. PLAN 426 FOR NOTES.

CITY OF MISSION VIEJO

48" REINFORCED CONCRETE MANHOLE

STANDARD PLAN NO.

419

Roger Henderson 9-23-03

APPROVED RCE 30190 DATE

SHT 1 OF 2

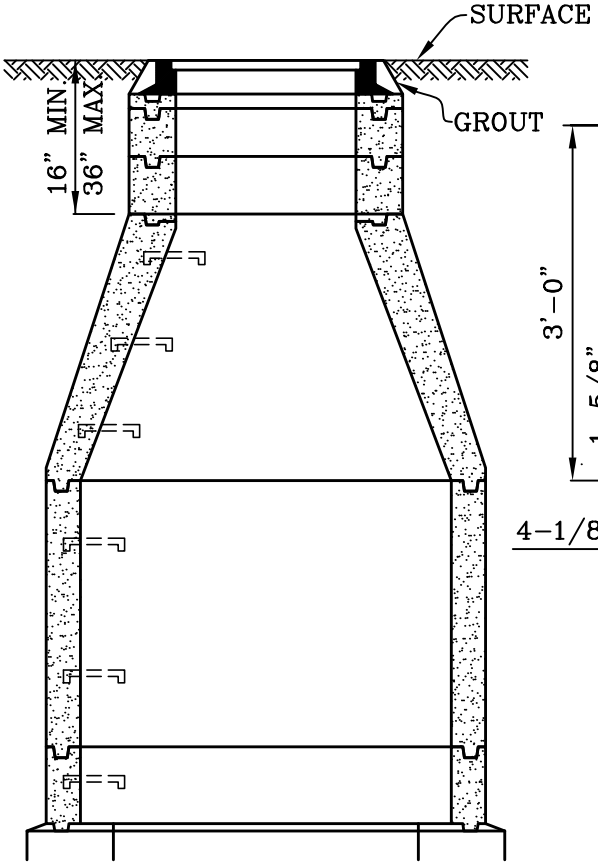

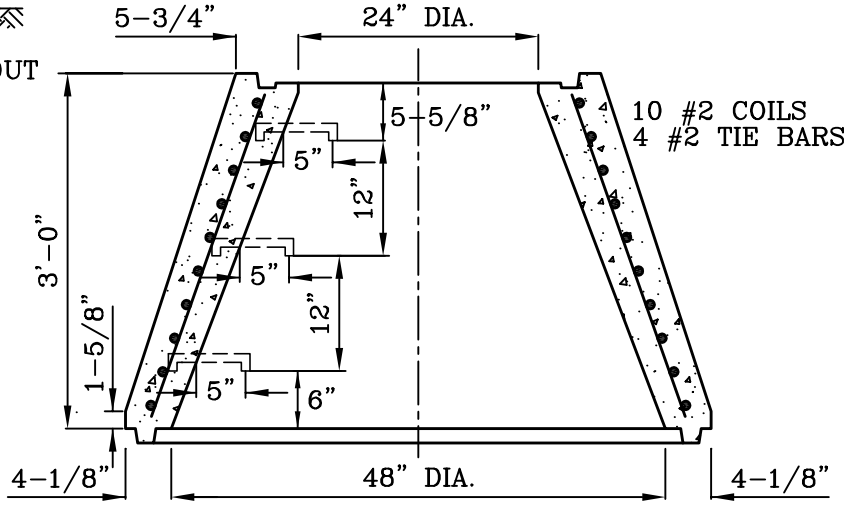

TOP OF CONE SHALL BE PLACED A MINIMUM OF 6" BELOW BOTTOM OF ROADWAY STRUCTURAL SECTION OR A MINIMUM OF 16" BELOW FINISH GRADE, WHICHEVER IS GREATEST.

SEE SHEET 2 OF 2 OF STD. PLAN 426 FOR NOTES.

CITY OF MISSION VIEJO

48" REINFORCED CONCRETE MANHOLE

STANDARD PLAN NO.

419

9-23-03

APPROVED RCE 30190 DATE

SHT 2 OF 2

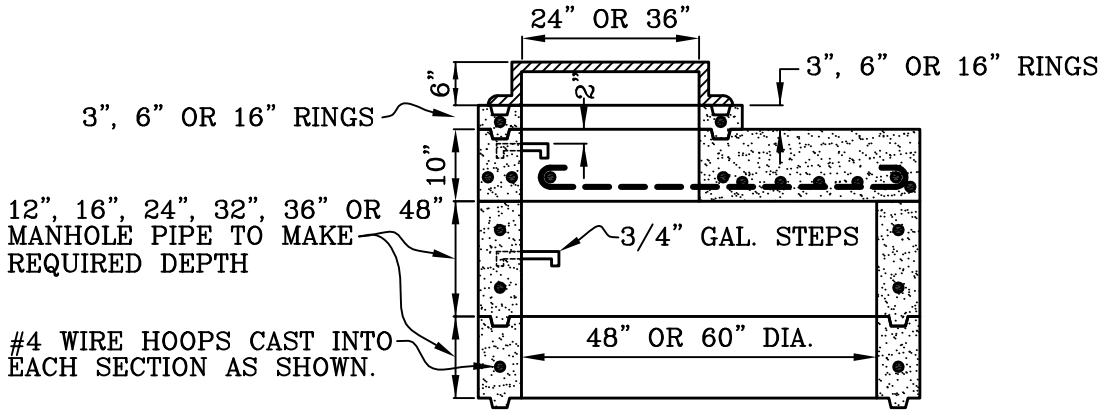

TYPICAL SECTION
FLAT TOP MANHOLE

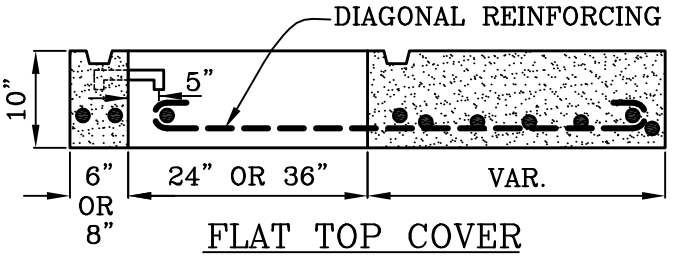

FLAT TOP COVER

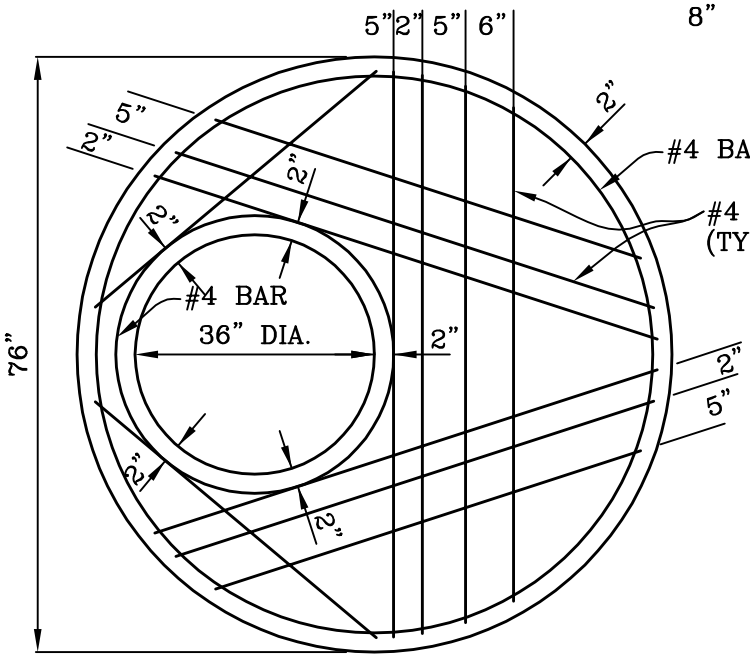

SEE SHEET 2 FOR NOTES

PLAN OF 60" COVER WITH
36" ACCESS

CITY OF MISSION VIEJO

	FLAT TOP MANHOLE COVERS	STANDARD PLAN NO. 420
	9-23-03	
	APPROVED RCE 30190 DATE	SHT 1 OF 2

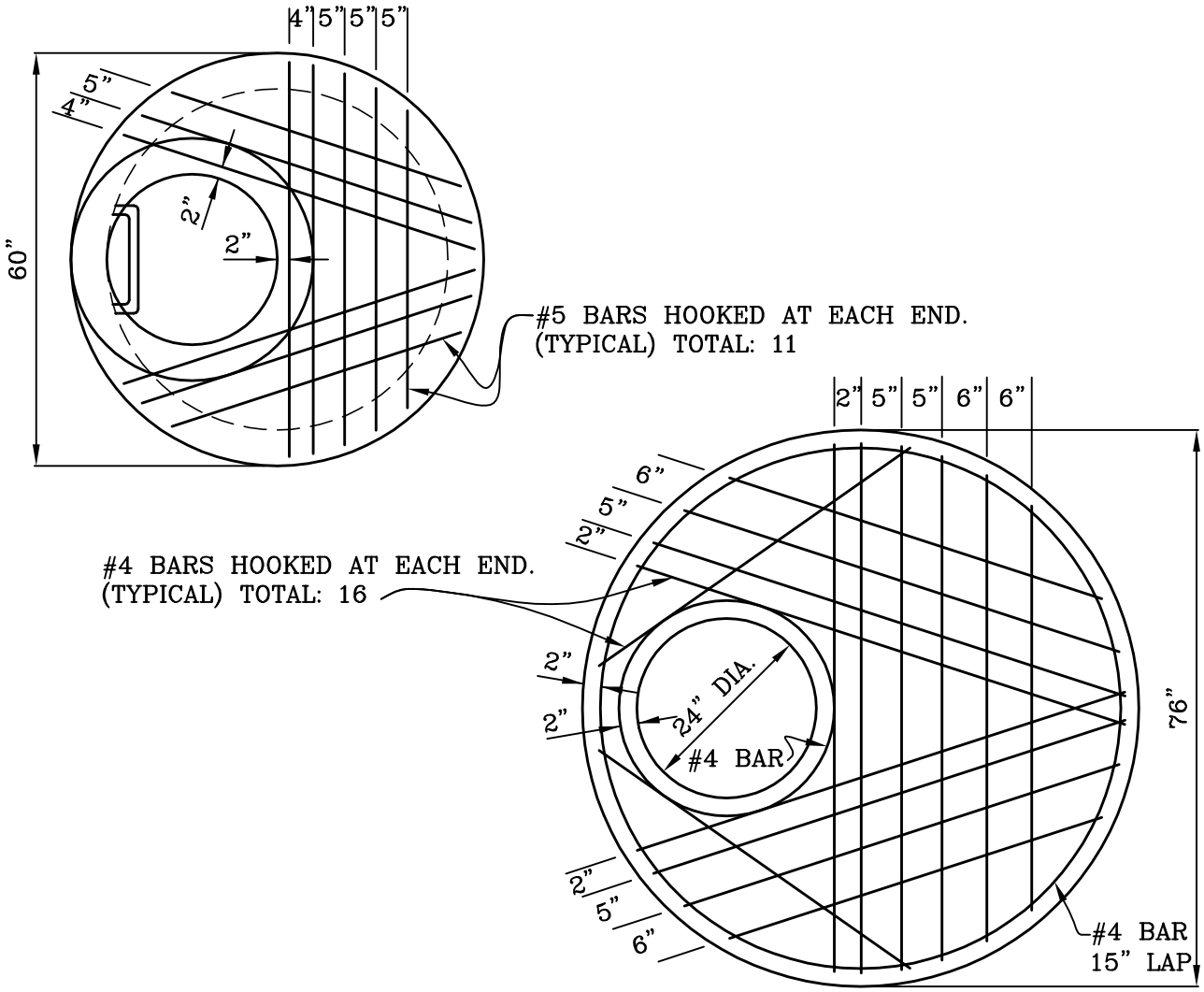

PLAN OF 60" COVER WITH
24" ACCESS

NOTES:

1. SEE STD. PLAN 424 FOR MANHOLE FRAME AND COVER.
2. SEE STD. PLAN 422 FOR MANHOLE STEPS. MAX. SPACING = 17".
3. SEE STD. PLAN 416 FOR RING AND MANHOLE PIPE.
4. CONSTRUCTION SHALL BE IN ACCORDANCE WITH STANDARD SPECIFICATIONS FOR PUBLIC WORKS CONSTRUCTION.

CITY OF MISSION VIEJO

FLAT TOP MANHOLE COVERS

STANDARD PLAN NO.

420

Robert Henderson 9-23-03

APPROVED RCE 30190 DATE

SHT 2 OF 2

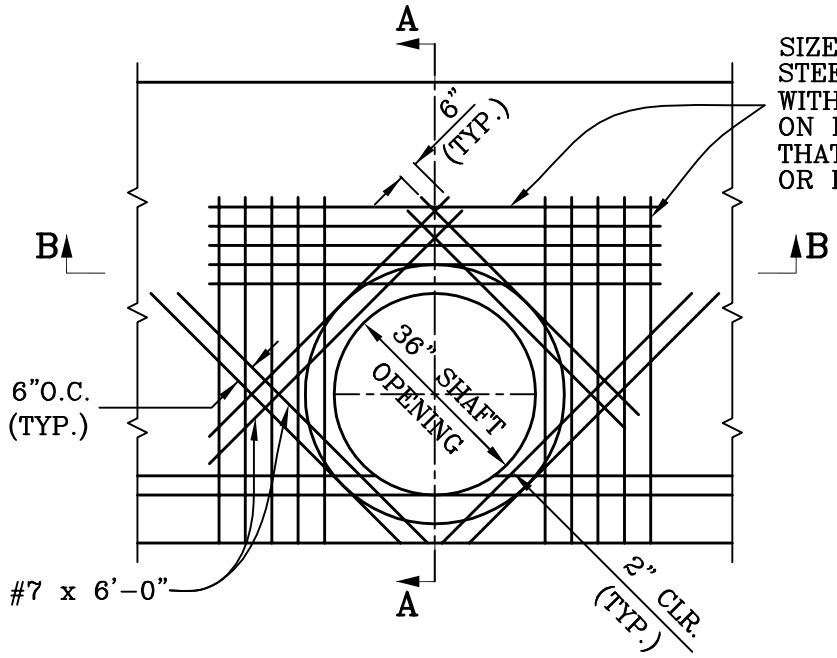

SIZE AND SPACING OF REINFORCING STEEL SHALL BE AS SHOWN ON PLANS WITH THE ADDITION OF FOUR (4) BARS ON EACH SIDE OF MANHOLE SHAFT THAT SHALL BE #7 MINIMUM 6" O.C. OR EQUIVALENT.

PLAN

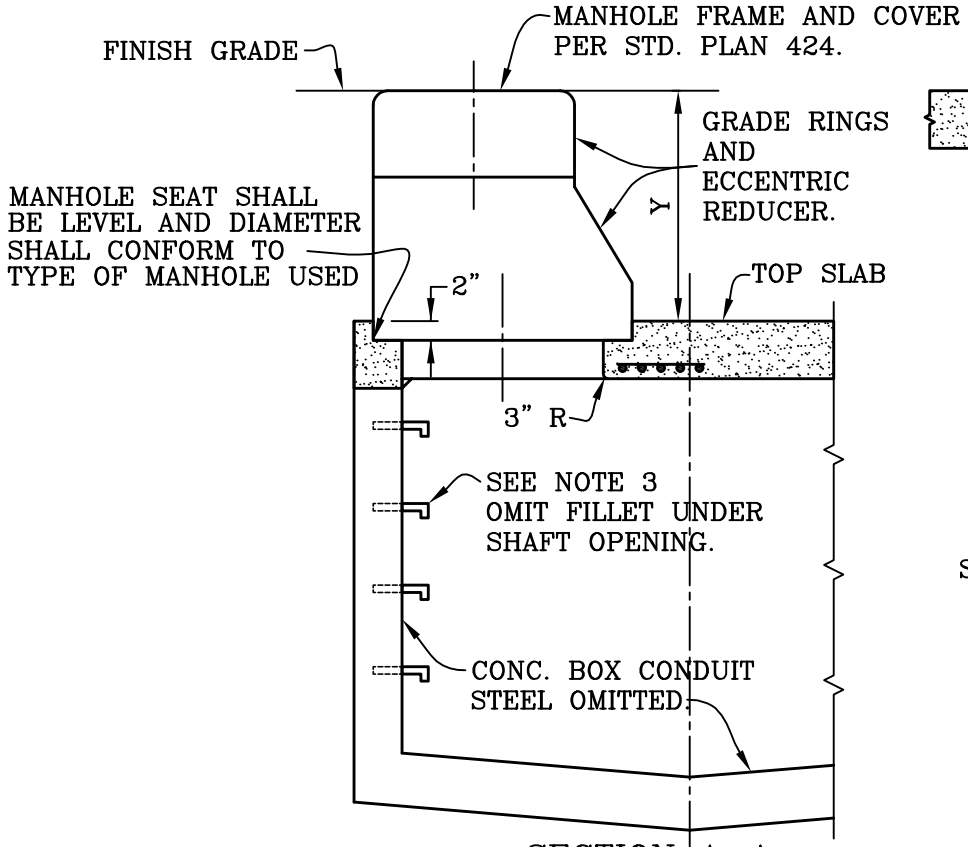

SECTION A–A

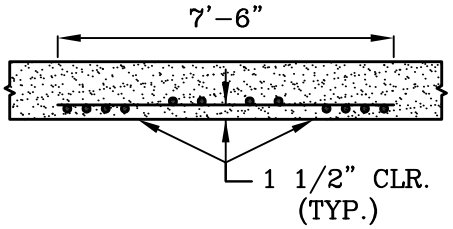

SECTION B–B
(TOP SLAB ONLY)

SEE SHEET 2 FOR NOTES

CITY OF MISSION VIEJO

R.C. BOX MANHOLE

STANDARD PLAN NO.

421

APPROVED | RCE 30190 | DATE 9-23-03

SHT 1 OF 2

NOTES:

1. MANHOLE SHAFT CENTERLINES ARE SHOWN ON PLANS.
2. ALL REINFORCING STEEL SHALL BE PLACED IN BOTTOM FACE ONLY.
3. SEE STD. PLANS 416, 417, AND 422 FOR STEP PLACEMENT AND EMBEDMENT DETAILS.
4. STEEL REINFORCEMENT SHALL BE ONE AND ONE-HALF (1-1/2") INCH CLEAR. UNLESS OTHERWISE NOTED.
5. WHEN DEPTH Y FROM STREET GRADE TO TOP OF MANHOLE SEAT IS LESS THAN 2' 10-1/2" IN PAVED STREETS OR 3'-6" IN UNPAVED STREETS, CONSTRUCT 2' DIAMETER SHAFT USING CONCRETE RINGS AS PER STD. PLAN 417, OTHERWISE CONSTRUCT 3' DIAMETER SHAFT AS SHOWN ON THIS PLAN.

CITY OF MISSION VIEJO

R.C. BOX MANHOLE

STANDARD PLAN NO.

421

9-23-03

APPROVED RCE 30190 DATE

SHT 2 OF 2

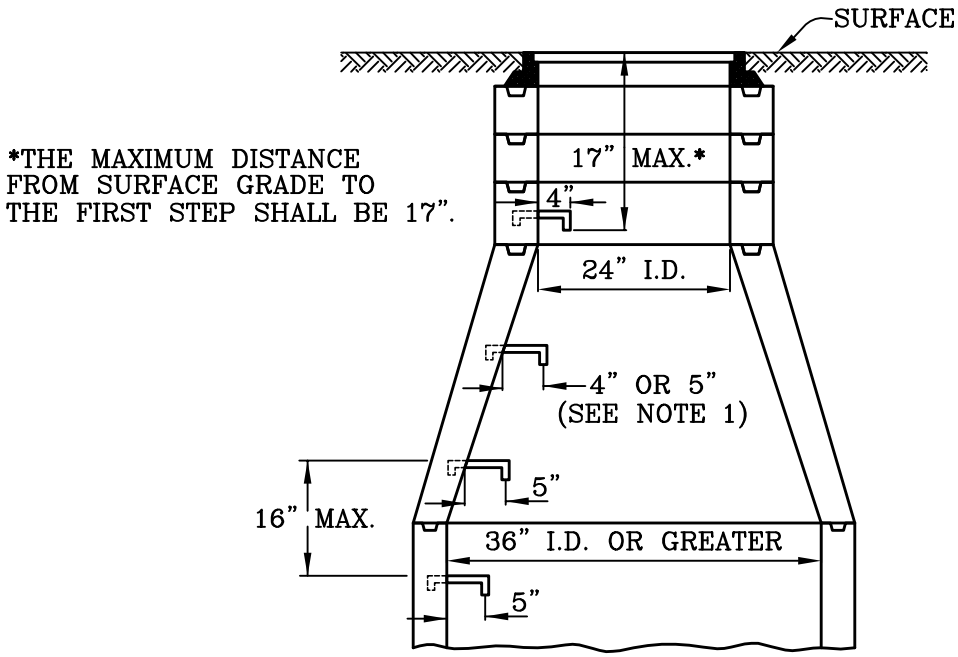

TYPICAL MANHOLE

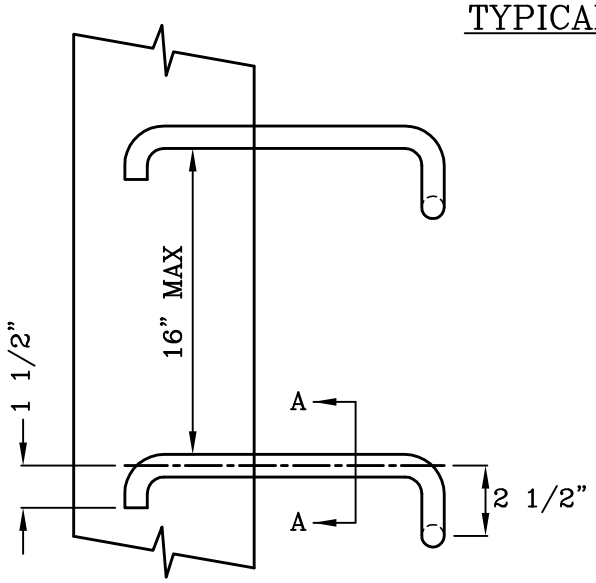

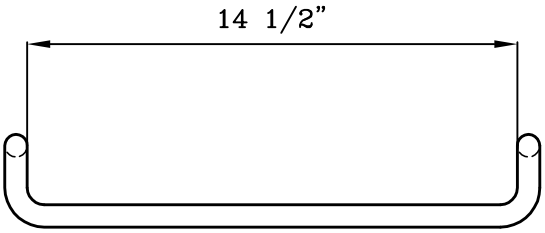

SECTION A–A

NOTES:

1. SEE STD. PLANS 416 AND 417 FOR MANHOLE STEP SPACING AND PLACEMENT.
2. MATERIAL SHALL BE 3/4" OF STEEL CONFORMING TO A.S.T.M. A575, A576, OR A615, GALVANIZED AFTER FABRICATION IN ACCORDANCE WITH A.S.T.M. A123.
3. STEPS SHALL HAVE A MINIMUM 3 INCH OF EMBEDMENT. PROJECTION FROM POINT OF POINT OF EMBEDMENT AS SHOWN ON STD PLAN 416, 417, 418 AND 419.

CITY OF MISSION VIEJO

MISSION VIEJO CALIFORNIA 1988	MANHOLE STEPS	STANDARD PLAN NO. 422
	Kevin Henderson 9-23-03 APPROVED RCE 30190 DATE	SHT 1 OF 1

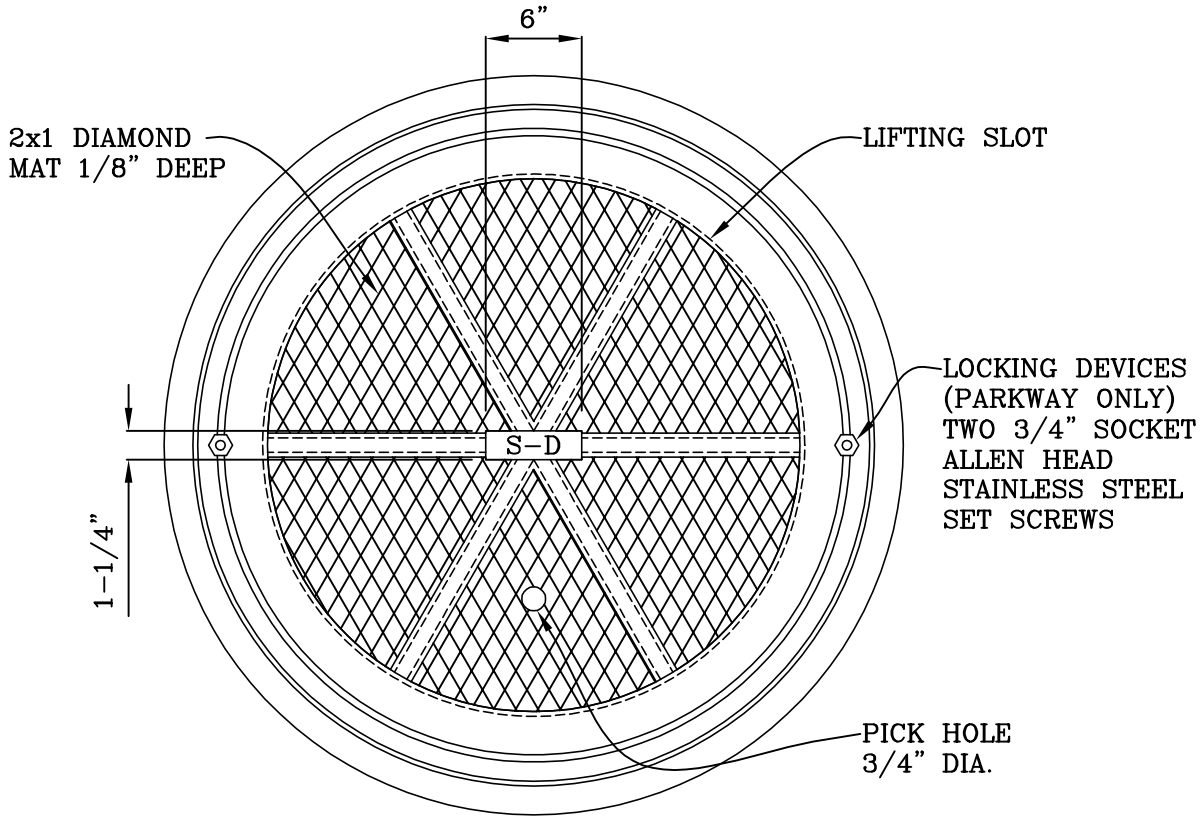

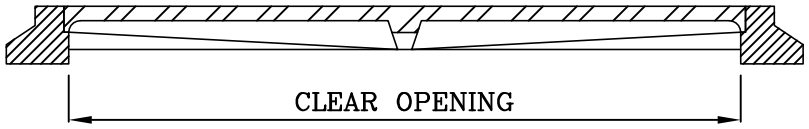

NOTES:

1. FOR 22" PARKWAY MANHOLE OPENING USE ALHAMBRA FOUNDRY A-1531 (GALVANIZED) OR APPROVED EQUAL WITH LOCKING DEVICE. APPROXIMATE SHIPPING WEIGHT = 130 LBS.
2. FOR 36" PARKWAY MANHOLE OPENING USE ALHAMBRA FOUNDRY A-1261-4 (GALVANIZED) OR APPROVED EQUAL WITH LOCKING DEVICE. APPROXIMATE SHIPPING WEIGHT = 575 LBS.
3. FOR 24" TRAFFIC MANHOLE OPENING USE ALHAMBRA FOUNDRY 1-1254 OR APPROVED EQUAL. APPROXIMATE SHIPPING WEIGHT = 315 LBS.
4. FOR TRAFFIC MANHOLE OPENING USE ALHAMBRA FOUNDRY A-1251-4 OR APPROVED EQUAL. APPROXIMATE SHIPPING WEIGHT = 575 LBS.

CITY OF MISSION VIEJO

MANHOLE FRAME AND COVER

STANDARD PLAN NO.

423

9-23-03

APPROVED RCE 30190 DATE

SHT 1 OF 1

CONSTRUCTION OF ANCHOR FOR
TRENCH E/SLOPING SIDE WALLS

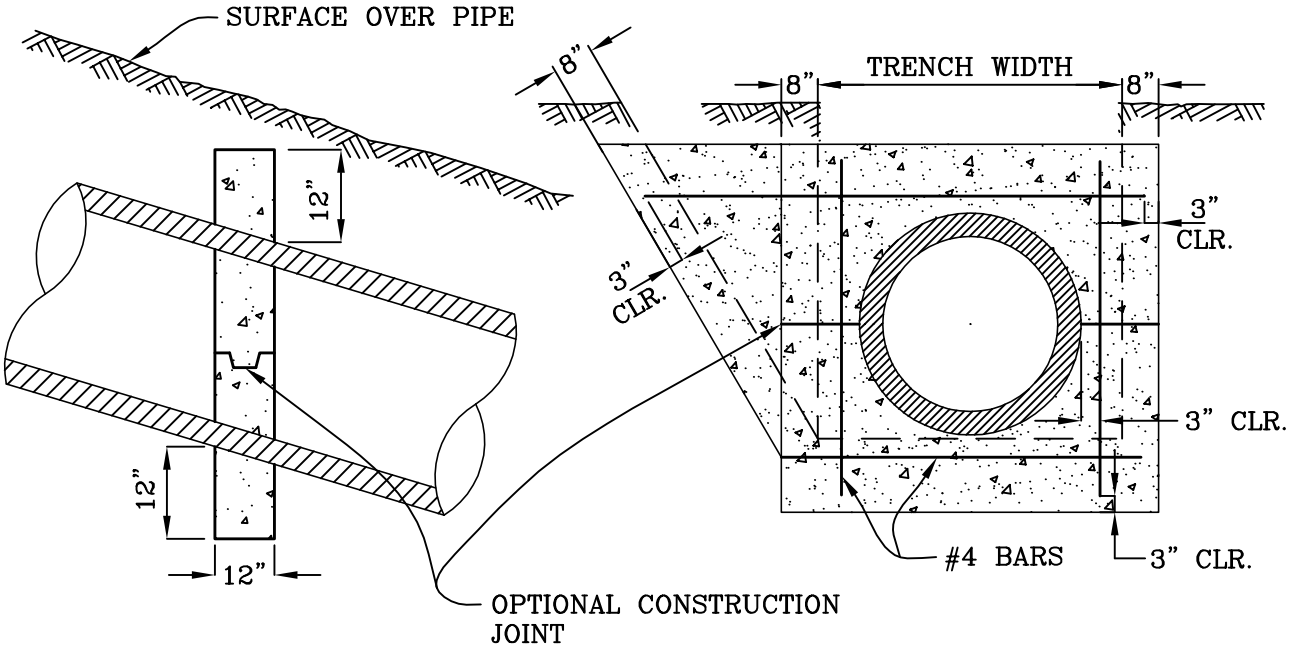

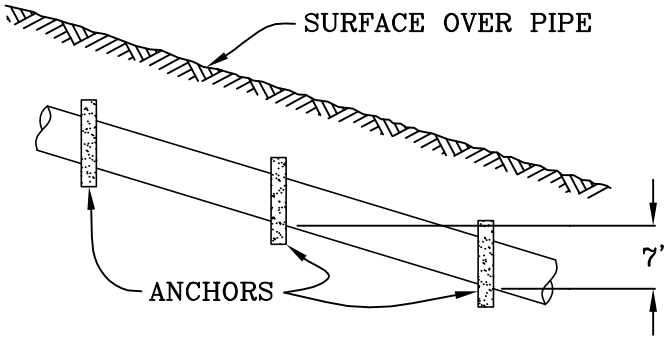

NOTES:

1. PIPE ANCHORS SHALL BE CONSTRUCTED AT 7' VERTICAL INTERVALS ON ALL SLOPES OF 5:1 OR STEEPER.
2. ALL REINFORCING STEEL SHALL BE #4 BARS.
3. CONCRETE SHALL BE CLASS 500-C-2500 CONCRETE.

CITY OF MISSION VIEJO

CONCRETE PIPE SLOPE ANCHOR

STANDARD PLAN NO.

424

Robert Henderson 9-23-03

APPROVED RCE 30190 DATE

SHT 1 OF 1

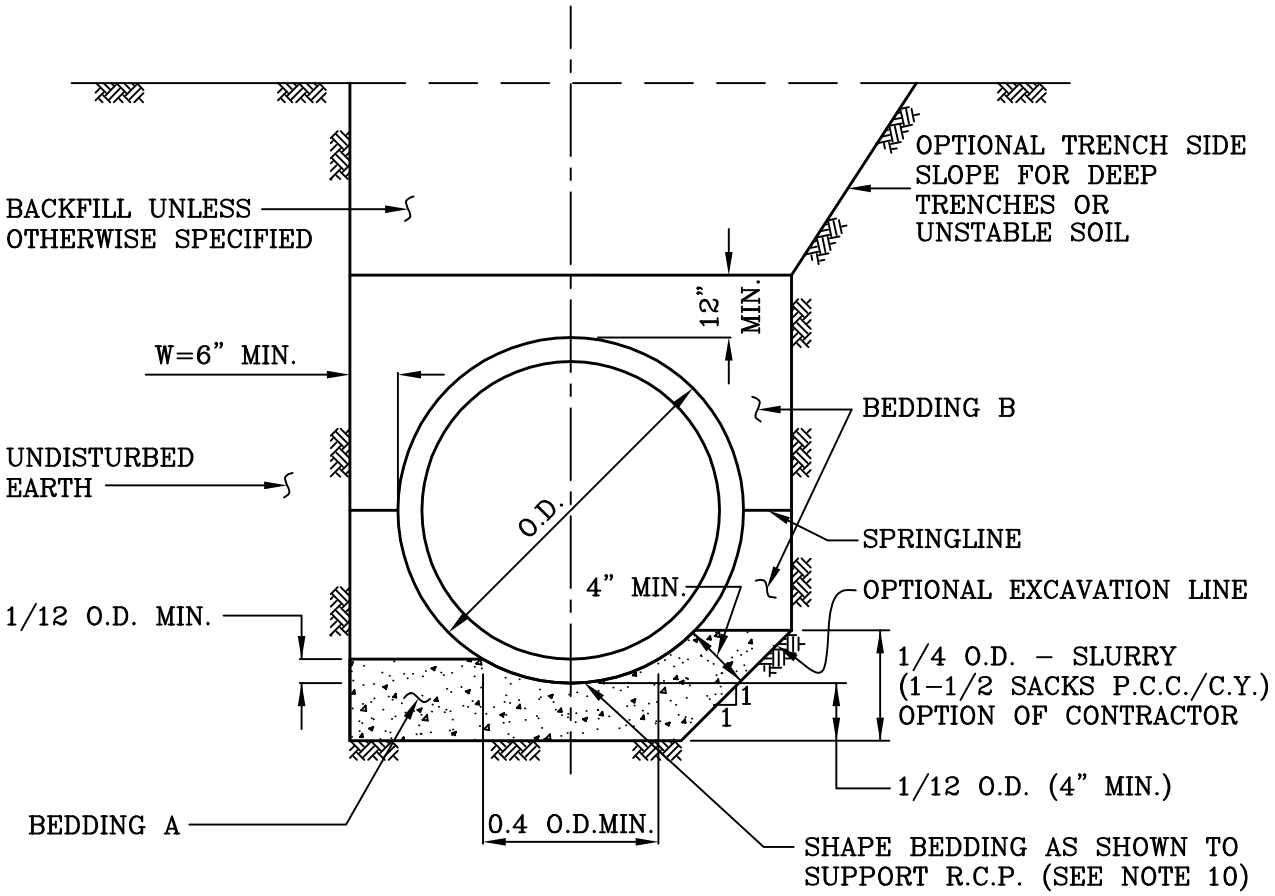

SEE SHEET 2 FOR NOTES

CITY OF MISSION VIEJO

BEDDING DETAIL

STANDARD PLAN NO.

430

9-23-03

APPROVED RCE 30190 DATE

SHT 1 OF 2

NOTES:

1. BEDDING "A" SHALL BE COMPOSED OF SAND WITH A MINIMUM SAND EQUIVALENT OF 30, NO.3 OR NO.4 CRUSHED ROCK OR GRAVEL PER STANDARD SPECIFICATIONS FOR PUBLIC WORKS CONSTRUCTION OR OTHER GRANULAR MATERIAL AS MAY BE SPECIFIED OR APPROVED BY THE CITY ENGINEER.

2. BEDDING "B" SHALL BE COMPOSED OF SAND WITH A MINIMUM SAND EQUIVALENT OF 30, AS MAY BE APPROVED BY THE CITY ENGINEER AND SHALL CONFORM TO SECTION 306-1.2.1 OF THE STANDARD SPECIFICATIONS FOR PUBLIC WORKS CONSTRUCTION.

3. BEDDING "B" SHALL BE COMPACTED TO A RELATIVE COMPACTION OF NOT LESS THAN 90% UNLESS OTHERWISE SPECIFIED.

4. BEDDING "B" SHALL BE PLACED IN TWO OR MORE LIFTS FOR O.D. GREATER THAN 60 INCHES.

5. BACKFILL SHALL BE PER SECTION 306-1.3 OF THE STANDARD SPECIFICATIONS FOR PUBLIC WORKS CONSTRUCTION, OR 2- SACK CEMENT SLURRY.

6. "W" SHALL INCLUDE THE THICKNESS OF ANY SHORING.

7. SHORING SHALL BE A MINIMUM OF 6 INCHES FROM THE PIPE AT SPRINGLINE.

8. AN IMPROVED BEDDING METHOD SHALL BE SUBMITTED TO THE CITY ENGINEER FOR ANY "W" OTHER THAN THAT PERMITTED IN NOTE 6.

9. THE TRENCH BOTTOM SHALL BE SHAPED AS SHOWN, OR THE CONTRACTOR, AT HIS OPTION MAY CHOOSE NOT TO SCREED BEDDING "A" IN WHICH CASE, THE PIPE SHALL BE BACKFILLED TO A DEPTH OF 1/4 O.D. WITH TRENCH BACKFILL SLURRY AT HIS EXPENSE.

CITY OF MISSION VIEJO

MISSION VIEJO CALIFORNIA 1988	BEDDING DETAIL	STANDARD PLAN NO. 430
	Robert Henderson 9-23-03 APPROVED RCE 30190 DATE	SHT 2 OF 2

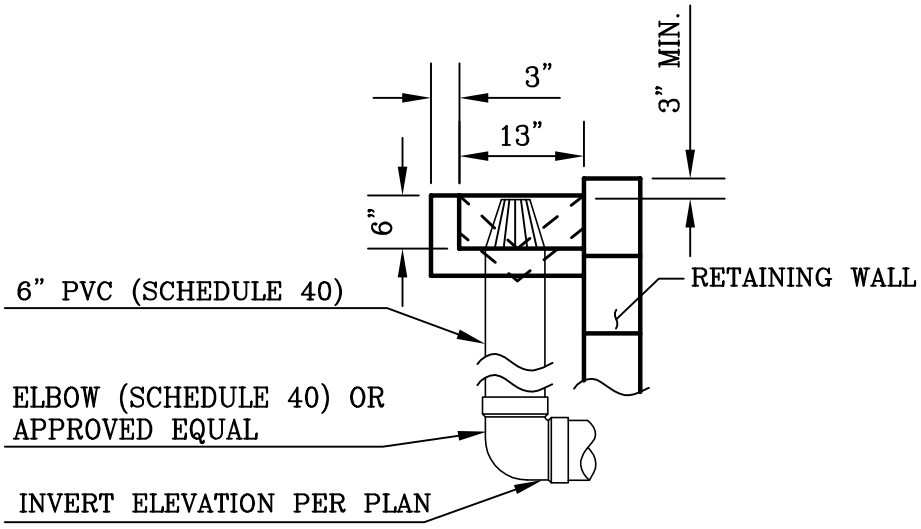

SECTION A–A

N.T.S.

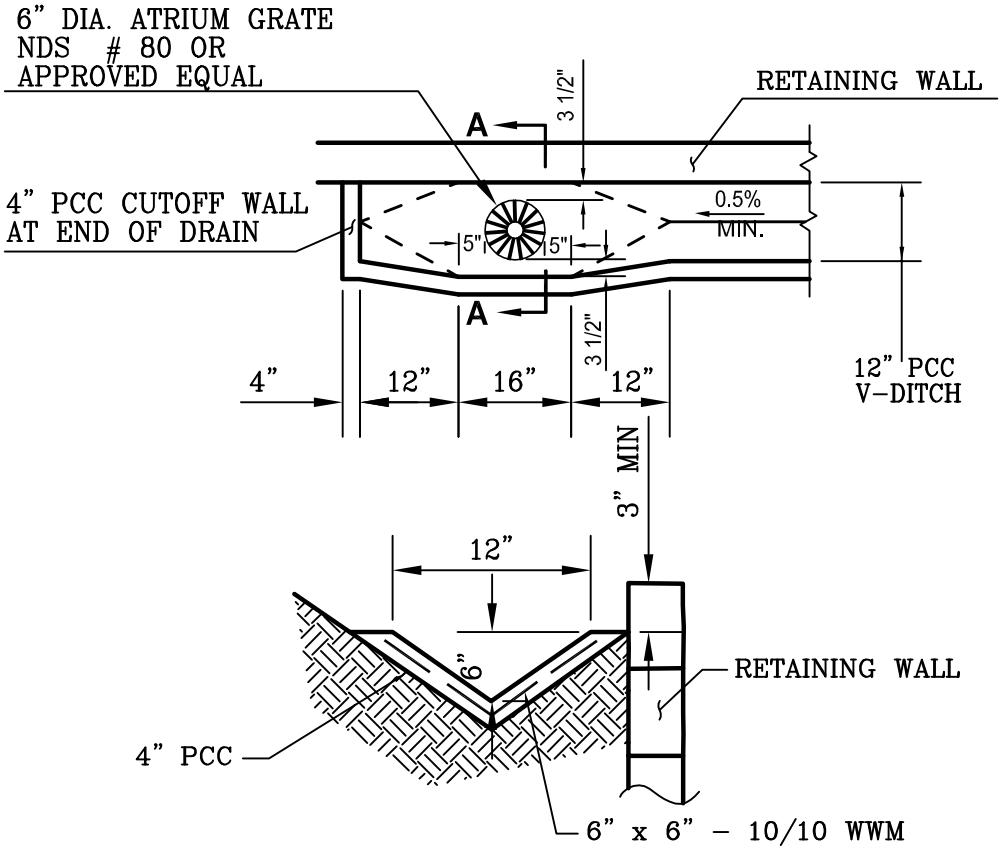

CITY OF MISSION VIEJO

RETAINING WALL V–DITCH

431

Rick Schlesinger 08/01/05

APPROVED BY: CITY ENGINEER RCE 51160 DATE

SHT 1 OF 1

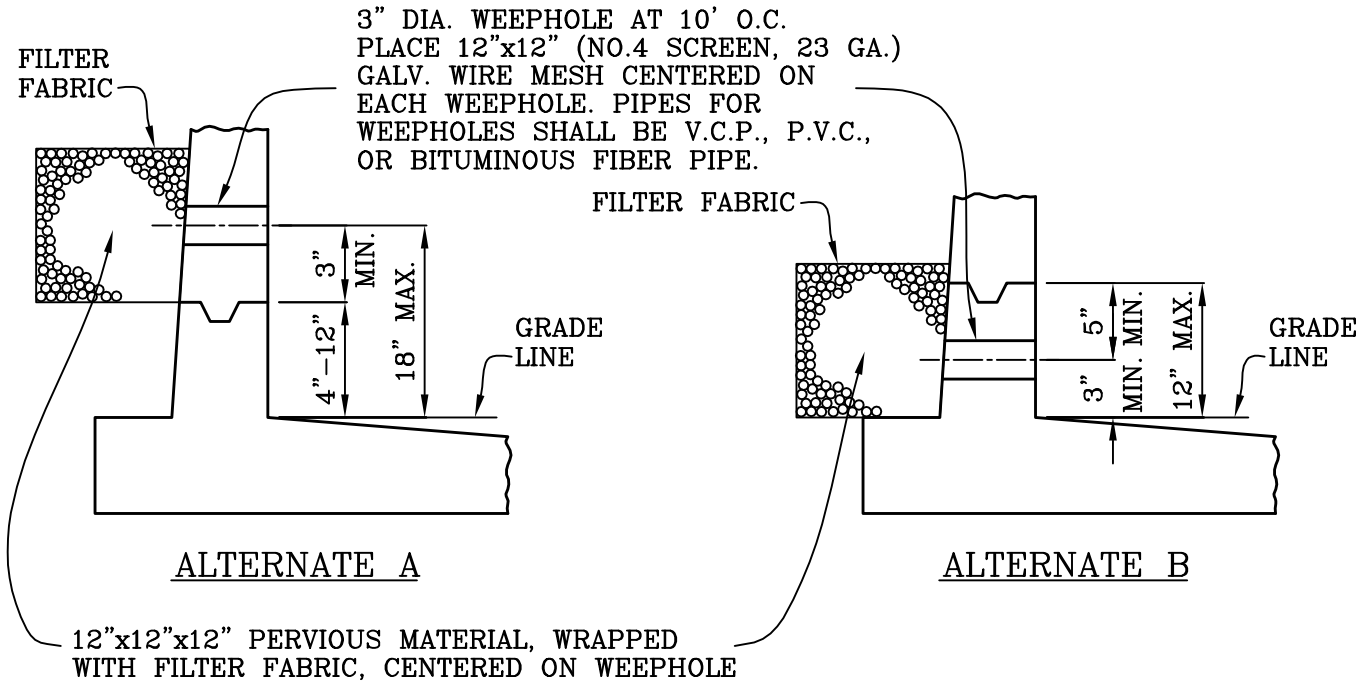

VERTICAL WALL CHANNEL

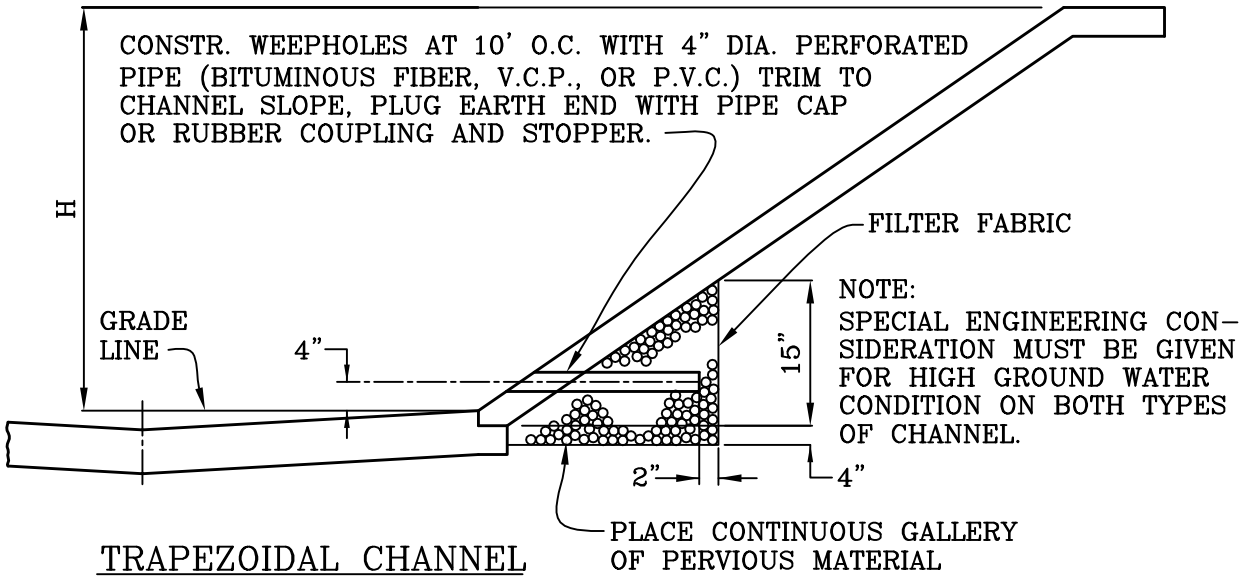

NOTE:
SPECIAL ENGINEERING CONSIDERATION MUST BE GIVEN FOR HIGH GROUND WATER CONDITION ON BOTH TYPES OF CHANNEL.

TRAPEZOIDAL CHANNEL

CITY OF MISSION VIEJO

CHANNEL WEEPHOLES

STANDARD PLAN NO.

432

Robert Henderson 9-23-03

APPROVED RCE 30190 DATE

SHT 1 OF 1

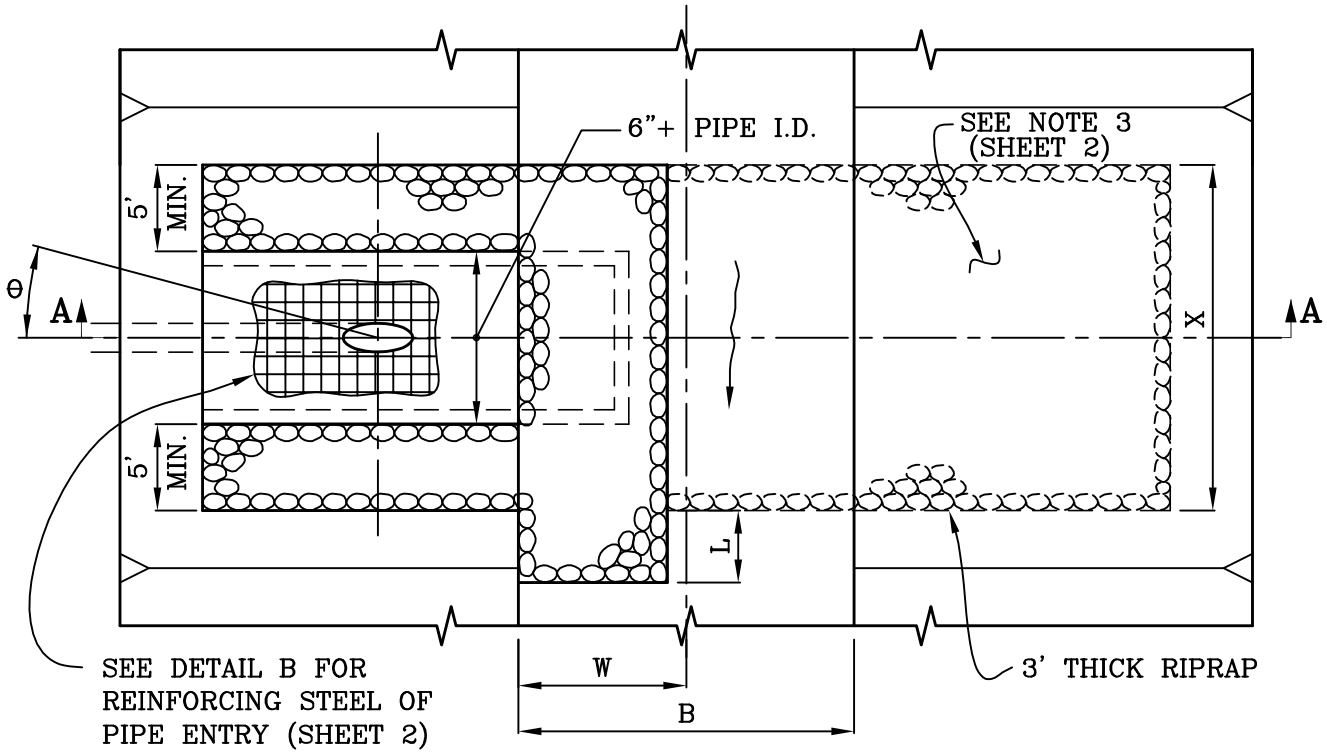

PLAN VIEW

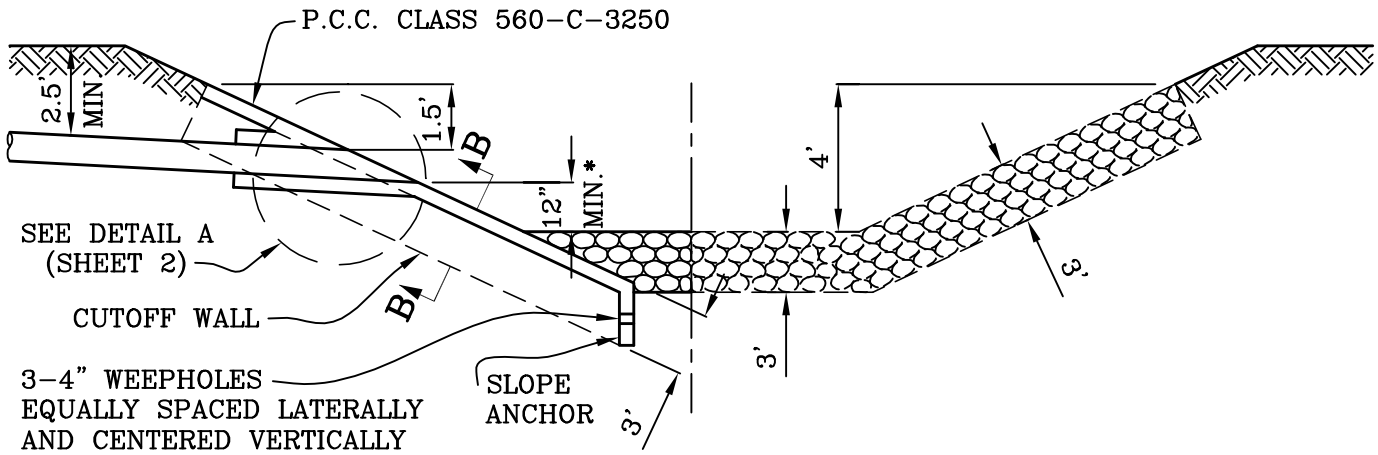

SECTION A-A
ELEVATION
NO SCALE

*12" ABOVE EXISTING OR
DESIGN GRADE LINE
(WHICHEVER IS HIGHER)

CITY OF MISSION VIEJO

	PIPE ENTRANCE TO EARTH CHANNEL	STANDARD PLAN NO. 433
	9-23-03	
	APPROVED RCE 30190 DATE	SHT 1 OF 2

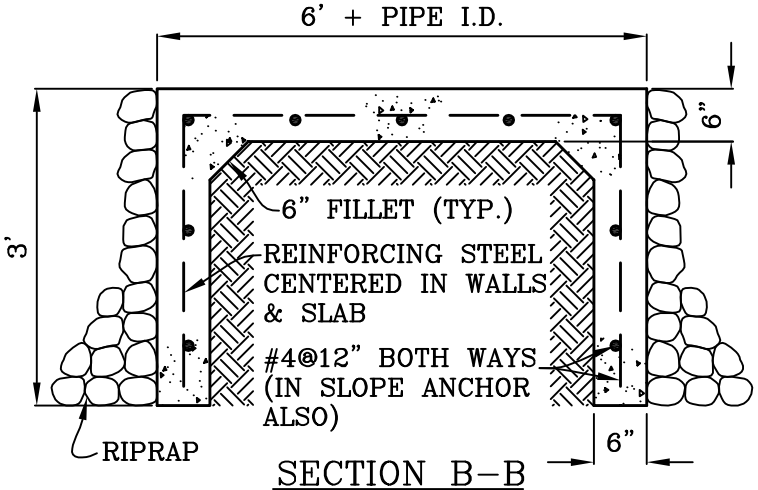

SECTION B–B
NO SCALE

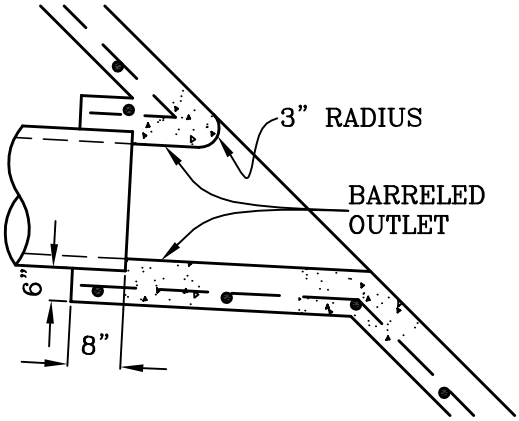

DETAIL A
NO SCALE

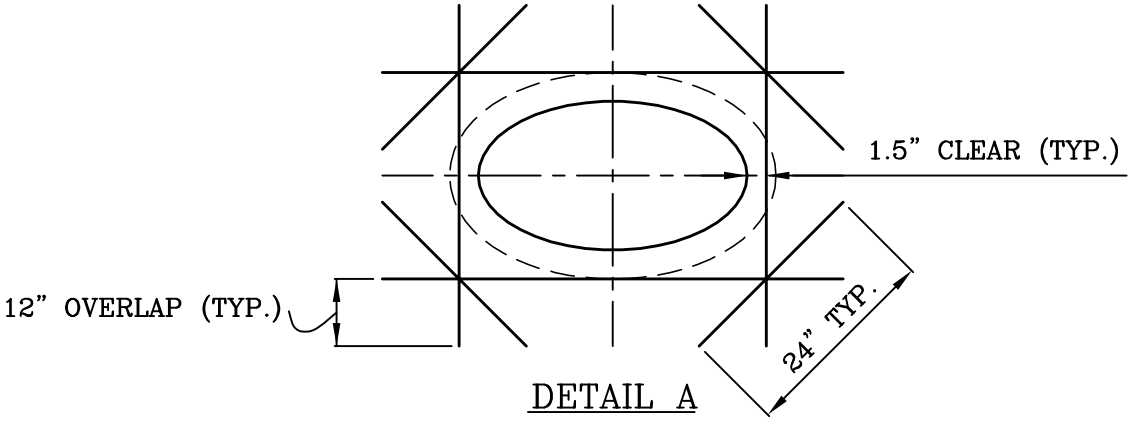

DETAIL A
NO SCALE

NOTES:

1. IF LATERAL FLOW EXCEEDS 10% OF THE UPSTREAM FLOW, ANGLE θ SHALL BE DETERMINED BY THE HYDRAULICS OF THE CONFLUENCE.
2. MAXIMUM SIDE SLOPE GRADIENT EQUALS 1.5 TO 1.0.
3. TERMINATE TRANSVERSE DIMENSION OF RIPRAP 10 FEET FROM TOE OF SLOPE. IF 10 FEET EXCEEDS 50% OF CHANNEL BASE WIDTH, OR CHANNEL VELOCITY EXCEEDS 10 FPS, RIPRAP "X" FEET WIDE SHALL EXTEND ACROSS INVERT AND 4 FEET UP OPPOSITE SLOPE, PER SECTION A–A.
4. INCREASE DOWNSTREAM LIMIT OF INVERT RIPRAP BLANKET BY "L" FEET IF LATERAL PIPE'S HORIZONTAL ENTRY ANGLE IS DEFLECTED FROM NORMAL. L=2 SIN θ (PIPE DIAMETER). IF "W" EXCEEDS 50% OF CHANNEL BASE WIDTH, OR CHANNEL VELOCITY EXCEEDS 10 FPS RIPRAP SHALL EXTEND ACROSS ENTIRE INVERT. (MIN. W=10 FT.)
5. PROVIDE 1.5" STEEL COVER.
6. LATERALS OF 24" OR LESS MAY BE BEVELED PIPE, 27" OR LARGER SHALL BE BARRELED.

CITY OF MISSION VIEJO

MISSION VIEJO CALIFORNIA 1988	PIPE ENTRANCE TO EARTH CHANNEL	STANDARD PLAN NO. 433
	Robert Henderson 9-23-03	
	APPROVED RCE 30190 DATE	SHT 2 OF 2

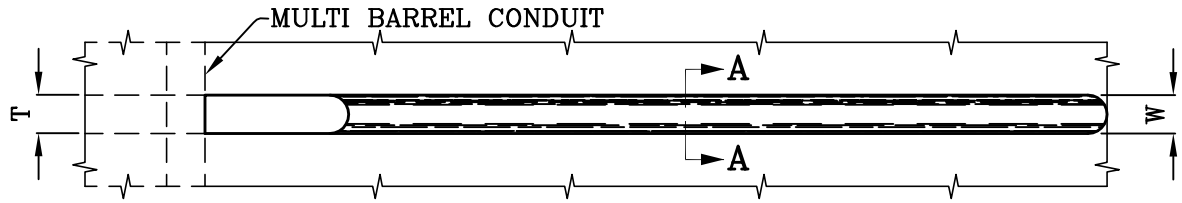

PLAN

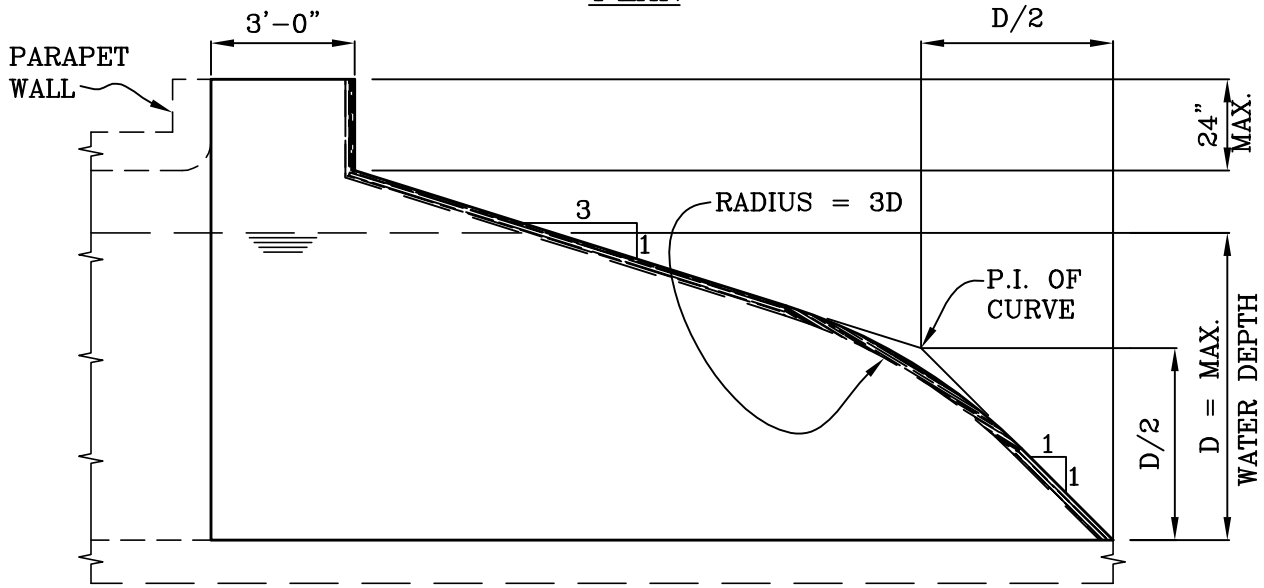

T = WALL THICKNESS
W = DEBRIS WALL THICKNESS

W = T
W = 12" IF T > 12"

ELEVATION

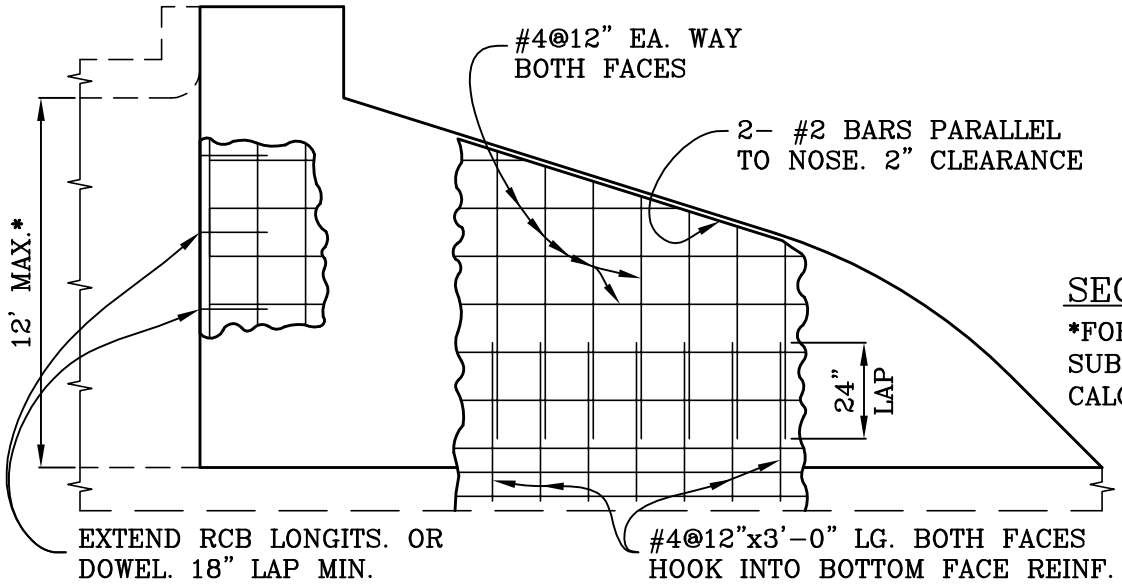

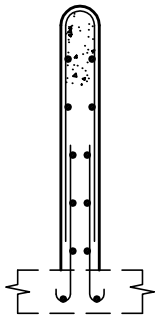

SECTION A-A

*FOR HEIGHTS > 12' SUBMIT REINFORCING CALCULATIONS.

CITY OF MISSION VIEJO

CULVERT DEBRIS WALL

STANDARD PLAN NO.

434

APPROVED RCE 30190 DATE 9-23-03

SHT 1 OF 1

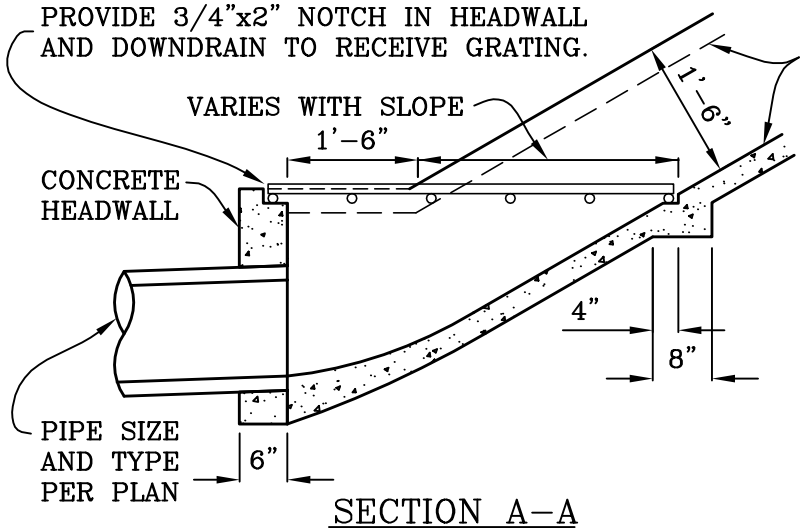

SECTION A-A

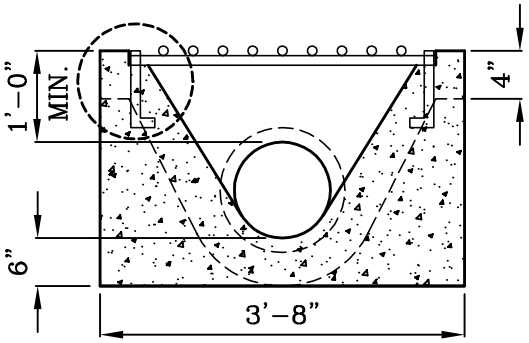

SECTION B-B

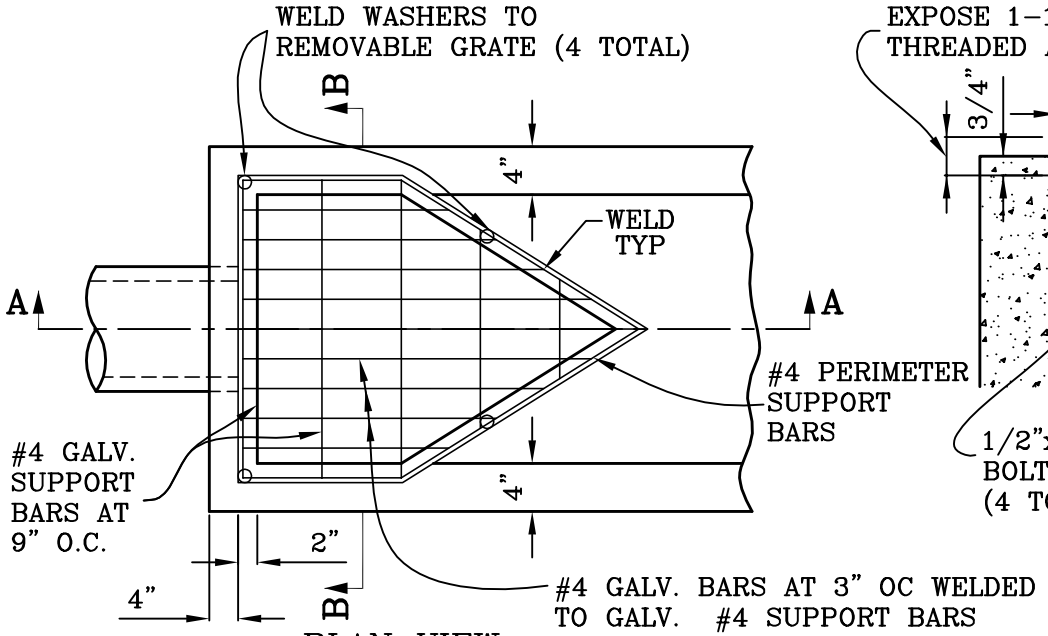

PLAN VIEW

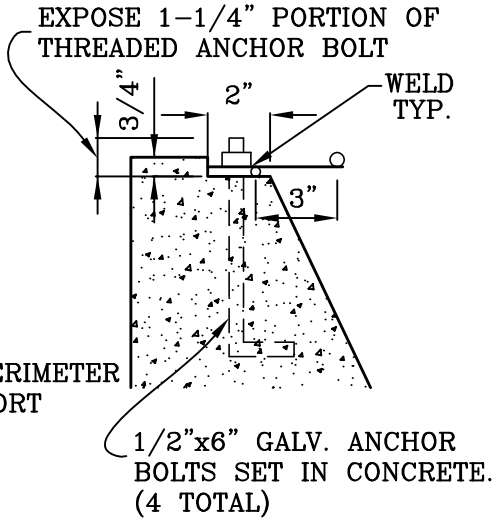

NOTES:

1. GROUND SHALL BE PRE-WETTED TO THE SATISFACTION OF THE CITY ENGINEER PRIOR TO THE PLACEMENT OF CONCRETE.
2. MATERIAL FOR CONSTRUCTION OF DOWNDRAIN SHALL BE CONCRETE REINFORCED WITH 6" X 6"-W1.4 X W1.4 WELDED WIRE FABRIC.
3. DOWNDRAIN TO PIPE TRANSITION SHALL NOT BE USED WITHIN PUBLIC ROAD RIGHT-OF-WAY.
4. GRATE SHALL BE HOT DIP GALVANIZED AFTER FABRICATION.

CITY OF MISSION VIEJO

DOWN DRAIN TO PIPE TRANSITION

STANDARD PLAN NO.

436

9-23-03

APPROVED RCE 30190 DATE

SHT 1 OF 1

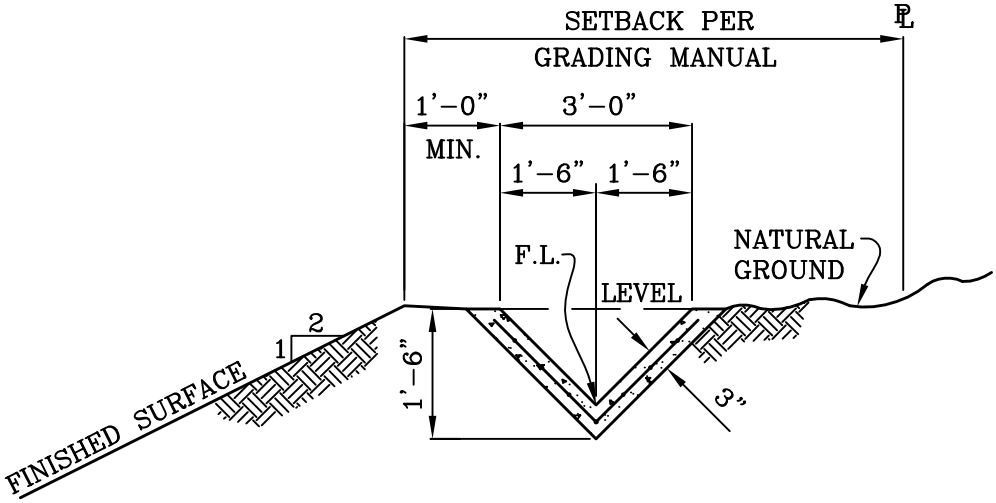

NOTES:

1. CONCRETE SHALL HAVE A MINIMUM ULTIMATE COMPRESSIVE STRENGTH AT 28 DAYS OF 2500 P.S.I. CONCRETE MAY BE PNEUMATICALLY PLACED AND SHALL CONFORM TO SECTION 2621 OF THE UNIFORM BUILDING CODE.

2. REINFORCING SHALL BE 6" x 6" – W1.4 x W1.4 WELDED WIRE MESH OR APPROVED EQUAL.

3. GROUND SHALL BE PRE–WETTED TO THE SATISFACTION OF THE CITY ENGINEER PRIOR TO PLACEMENT OF CONCRETE. CURING COMPOUND SHALL BE USED WHEN REQUIRED BY THE CITY ENGINEER.

4. ANCHORS SHALL BE CONSTRUCTED IN ACCORDANCE WITH STANDARD PLAN 439 SHEET 2 OF 3 WHEN SLOPE EQUALS OR EXCEEDS 2:1.

CITY OF MISSION VIEJO

MISSION VIEJO CALIFORNIA	INTERCEPTOR DRAIN	STANDARD PLAN NO. 437
	Robert Henderson 9-23-03	
	APPROVED RCE 30190 DATE	SHT 1 OF 1

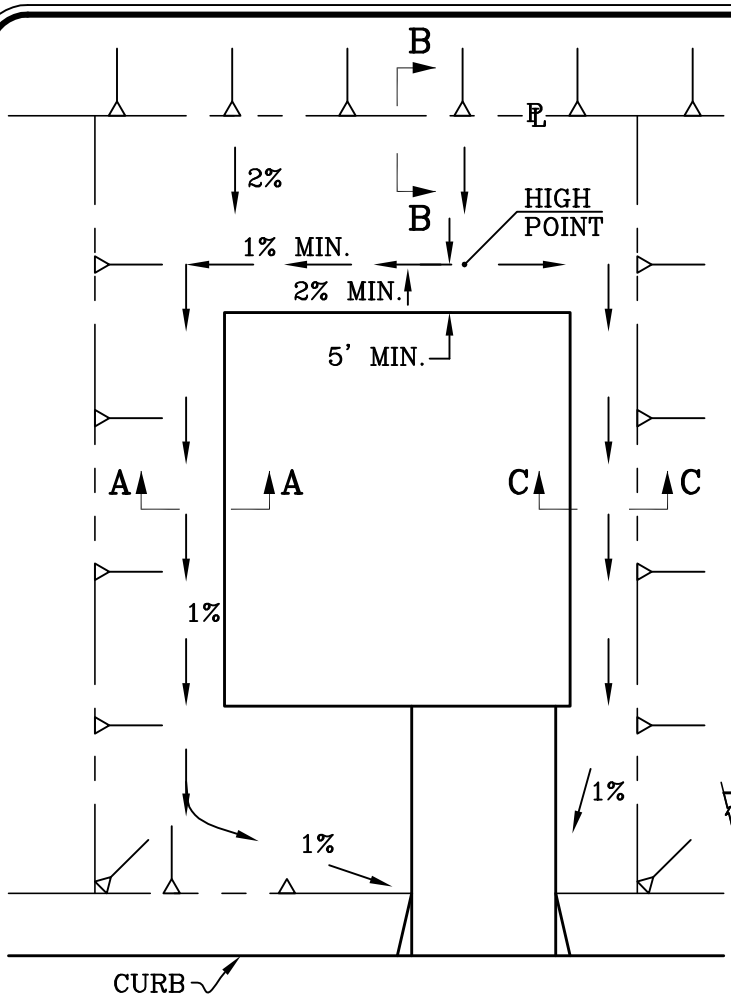

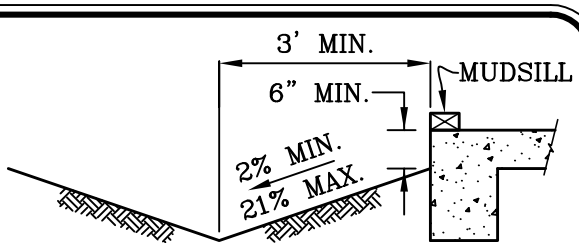

SECTION A–A

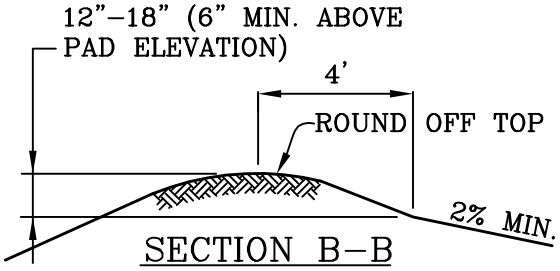

SECTION B–B

TYPICAL BERM DETAIL

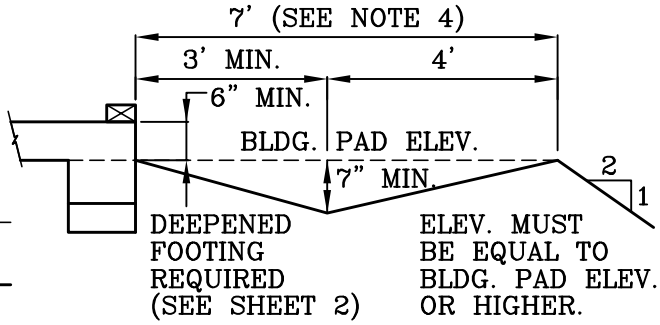

SECTION C–C
ALTERNATE

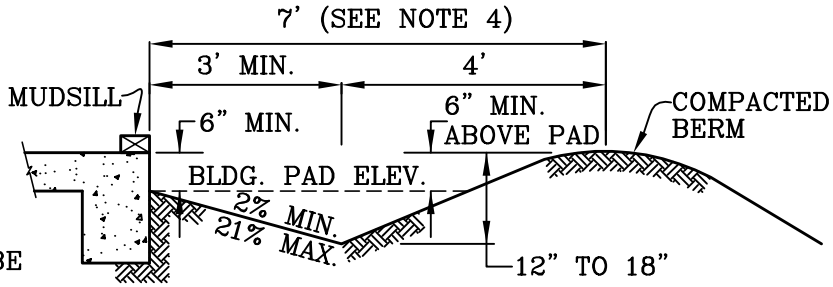

SECTION C–C

NOTES:

1. SWALES TO BE CUT IN AT 1% AT ROUGH GRADING BUILDING CONSTRUCTION.
2. A PAVED DRAINAGE SWALE, A CATCH BASIN AND PIPE, OR OTHER SIMILAR DRAINAGE DEVICE IS REQUIRED WHEN A STOOP, FIRE PLACE, OR PORTION OF THE BUILDING EXTENDS WITHIN THE MINIMUM ESTABLISHED DRAINAGE SETBACKS.
3. A COMMON DRAINAGE SWALE MAY BE USED ALONG SIDEYARD PROPERTY LINES AS SHOWN ON SHEET 2.
4. THIS DIMENSION MAY BE REDUCED TO THE REQUIRED MINIMUM SETBACK IN THE GRADING & EXCAVATION CODE IF AN IMPROVED DRAINAGE DEVICE IS USED.
5. ALL BUILDING SETBACKS FROM SLOPE SHALL BE IN ACCORDANCE WITH THE MISSION VIEJO GRADING & EXCAVATION CODE.

CITY OF MISSION VIEJO

MISSION VIEJO CALIFORNIA 1988	LOT DRAINAGE (HILLSIDE)	STANDARD PLAN NO. 438
	Kevin Henderson 9-23-03	
	APPROVED RCE 30190 DATE	SHT 1 OF 2

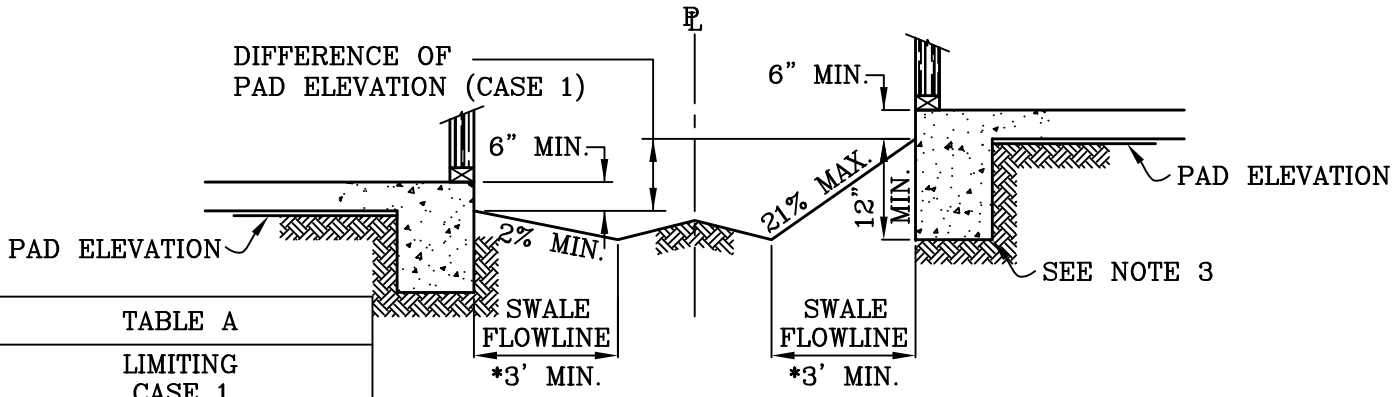

CASE 1

*CONCRETE SWALE REQUIRED WHEN FLOWLINE IS 3' FROM FOOTING.

TABLE A	
LIMITING CASE 1 CONDITIONS	
DRAINAGE SETBACK	MAXIMUM DIFF. IN PAD ELEVS.
3'	0.6'
4'	0.8'
5'	1.0'

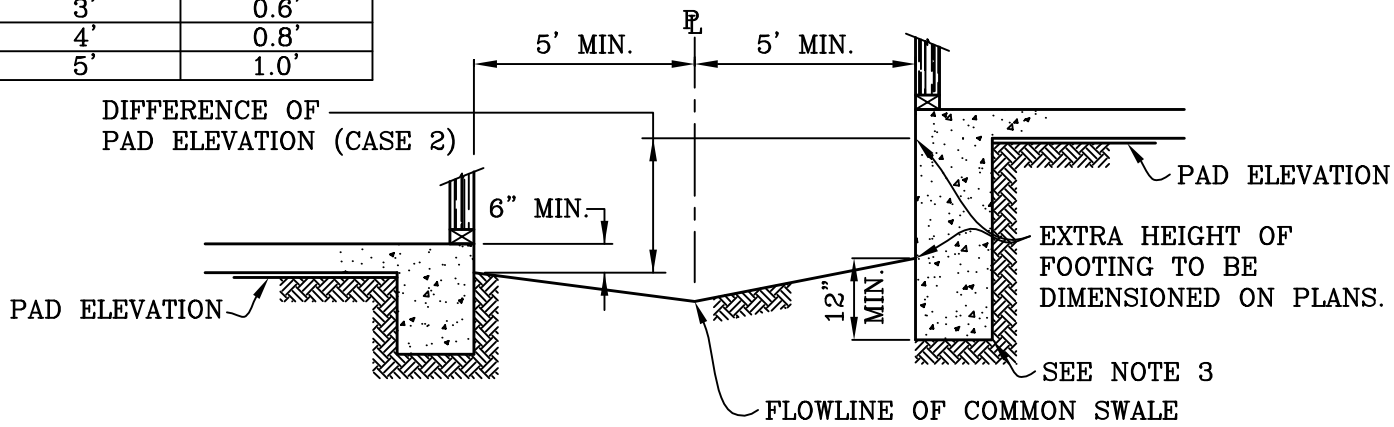

CASE 2

NOTES:

1. CASE 1 APPLIES WHEN THE DRAINAGE SETBACK AND DIFFERENCE IN PAD ELEVATIONS ALLOWS A COMMON, OR "W", DRAINAGE SWALE TO BE CONSTRUCTED IN ACCORDANCE WITH TABLE A.
2. CASE 2 MAY BE USED WITH A COMMON, OR "W", DRAINAGE SWALE WHEN THE DIFFERENCE OF PAD ELEVATIONS EXCEEDS THE LIMITING CONDITIONS OF TABLE A AND THE EXTRA HEIGHT FOOTING IS SHOWN ON THE GRADING AND STRUCTURAL PLANS.
3. IN NO CASE SHALL THE SWALE FLOWLINE BE LOWER THAN THE BOTTOM OF THE FOOTING WITHIN 5' OF THE FOOTING.
4. FIREPLACES MAY ENCROACH 2' INTO THE 5' MINIMUM SETBACK AREA IF THE DRAINAGE SWALE IS PAVED.

CITY OF MISSION VIEJO

LOT DRAINAGE

STANDARD PLAN NO.

438

9-23-03

APPROVED RCE 30190 DATE

SHT 2 OF 2

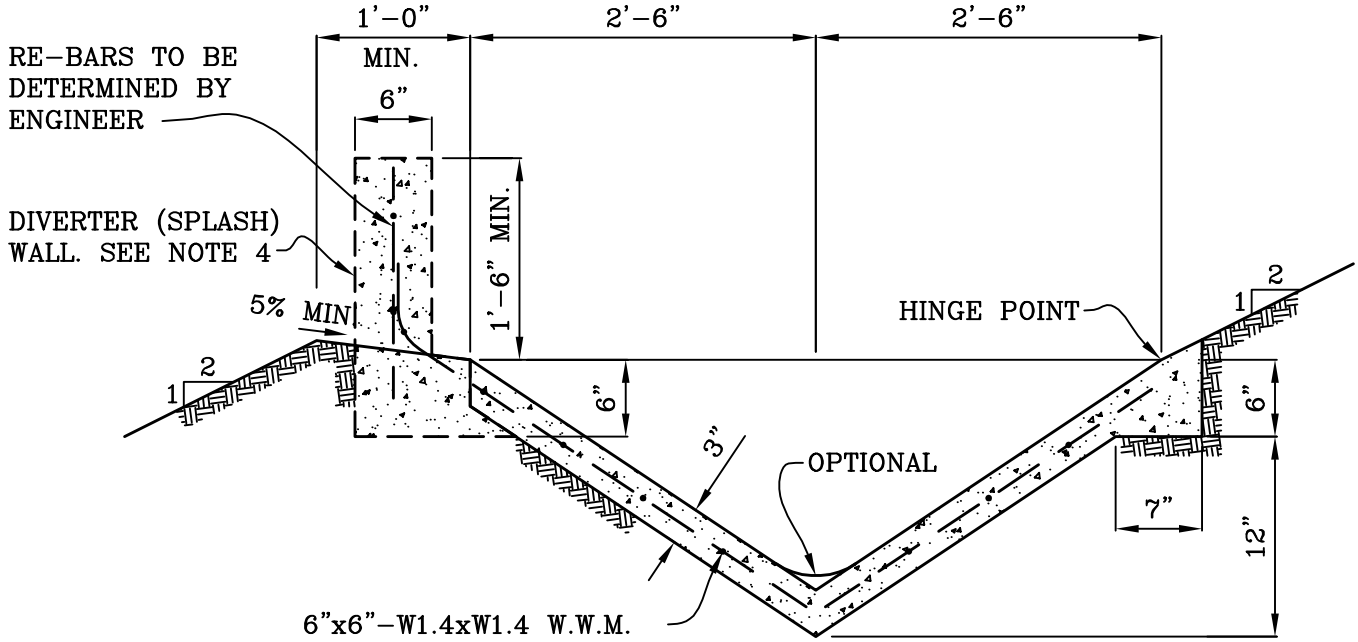

NOTES:

1. CONCRETE SHALL HAVE A MINIMUM ULTIMATE COMPRESSIVE STRENGTH AT 28 DAYS 2500 P.S.I. CONCRETE MAY BE PNEUMATICALLY PLACED AND SHALL CONFORM TO SECTION 2621 OF THE UNIFORM BUILDING CODE.

2. REINFORCING SHALL BE 6"x6"-W1.4xW1.4 WELDED WIRE MESH OR APPROVED EQUAL.

3. GROUND SHALL BE PRE-WETTED TO THE SATISFACTION OF THE INSPECTOR PRIOR TO PLACEMENT OF CONCRETE. MOISTURE LOSS RETARDENT SHALL BE USED WHEN REQUIRED BY THE INSPECTOR.

4. CONCRETE OR CONCRETE BLOCK DIVERTER (SPLASH) WALL TO BE CONSTRUCTED WHEN DOWNDRAIN TERMINATES AT TERRACE DRAIN. SEE PLAN FOR LOCATION DETAILS.

CITY OF MISSION VIEJO

TERRACE AND DOWN DRAINS

STANDARD PLAN NO.

439

Roger Henderson 9-23-03

APPROVED RCE 30190 DATE

SHT 1 OF 3

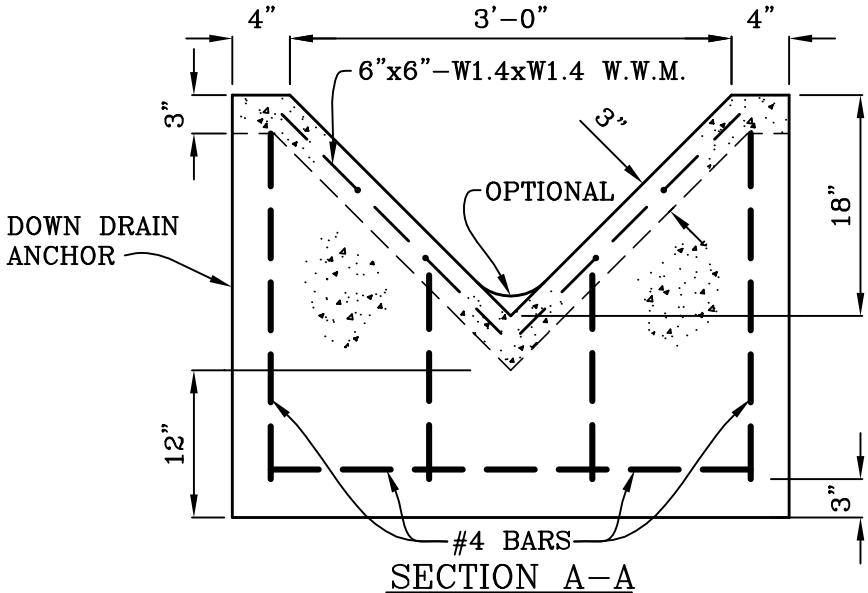

SECTION A-A

NOTES:

1. CONCRETE SHALL HAVE A MINIMUM ULTIMATE COMPRESSIVE STRENGTH AT 28 DAYS OF 2500 P.S.I. CONCRETE MAY BE PNEUMATICALLY PLACED AND SHALL CONFORM TO SECTION 2621 OF THE UNIFORM BUILDING CODE.
2. REINFORCING SHALL BE 6"x6"-W1.4xW1.4 WELDED WIRE MESH OR APPROVED EQUAL.
3. GROUND SHALL BE PRE-WETTED TO THE SATISFACTION OF THE INSPECTOR PRIOR TO PLACEMENT OF CONCRETE. MOISTURE LOSS RETARDENT SHALL BE USED WHEN REQUIRED BY THE INSPECTOR.

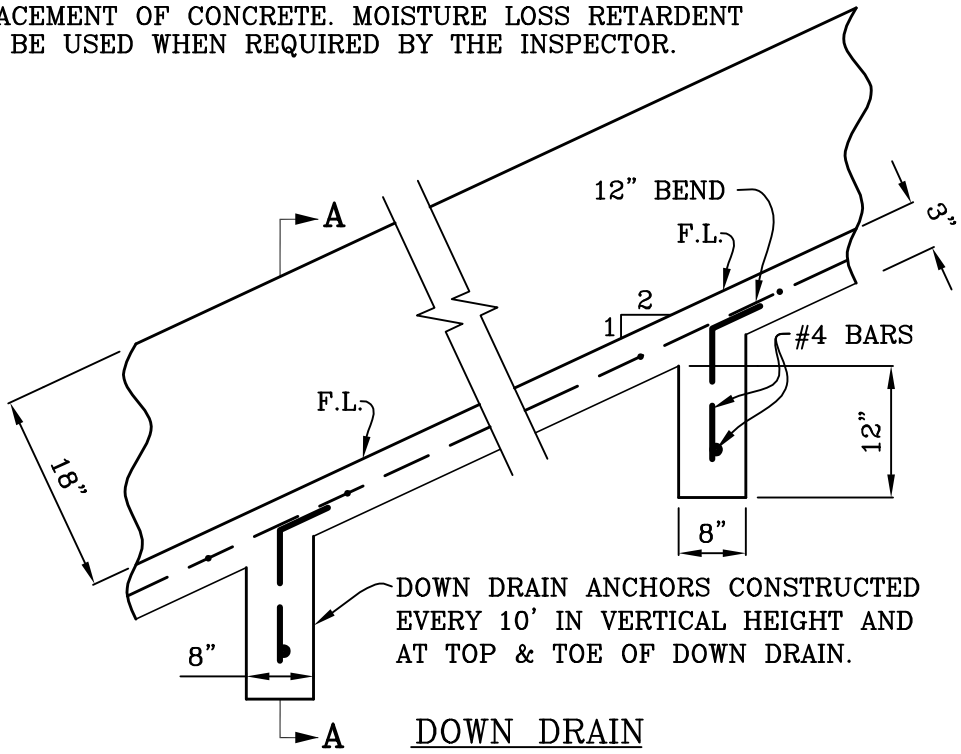

DOWN DRAIN

CITY OF MISSION VIEJO

MISSION VIEJO CALIFORNIA	TERRACE AND DOWN DRAIN	STANDARD PLAN NO. 439
	Robert Henderson 9-23-03	
	APPROVED RCE 30190 DATE	SHT 2 OF 3

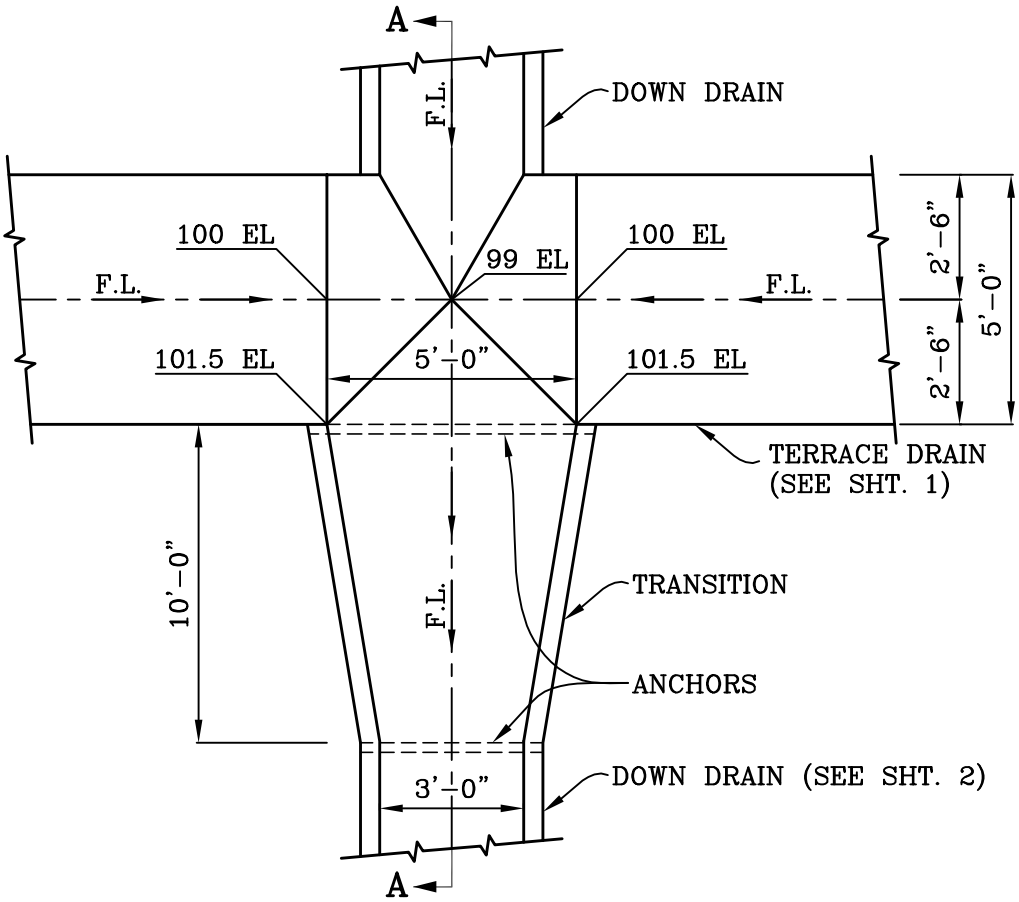

PLAN

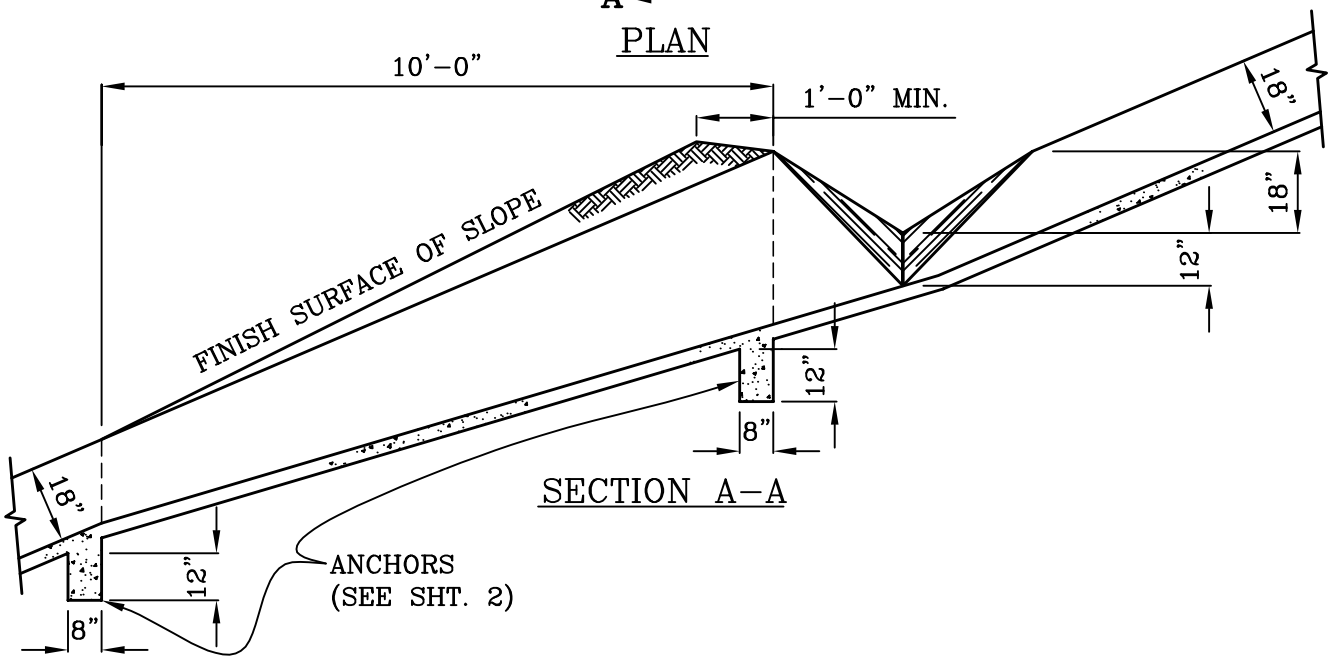

SECTION A-A

CITY OF MISSION VIEJO

MISSION VIEJO CALIFORNIA	TERRACE DRAIN & DOWN DRAIN INTERSECTION	STANDARD PLAN NO. 439
	Robert Henderson 9-23-03	
	APPROVED RCE 30190 DATE	SHT 3 OF 3

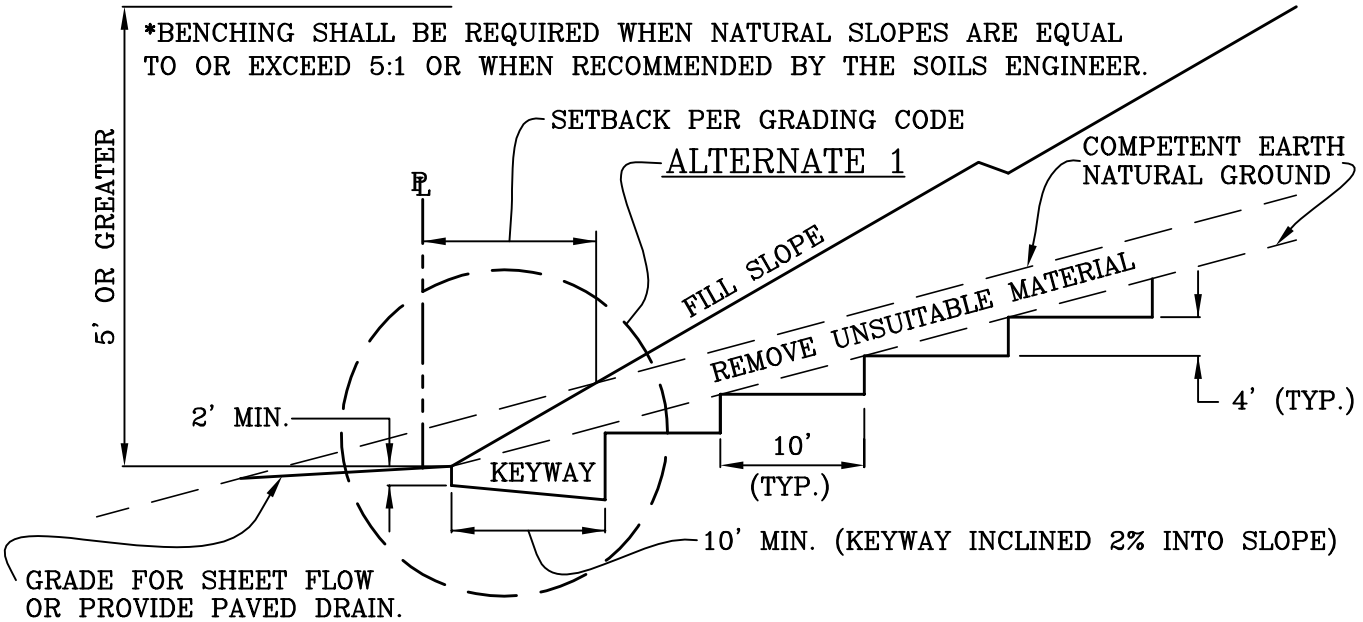

BENCHED FILL OVER NATURAL GROUND*

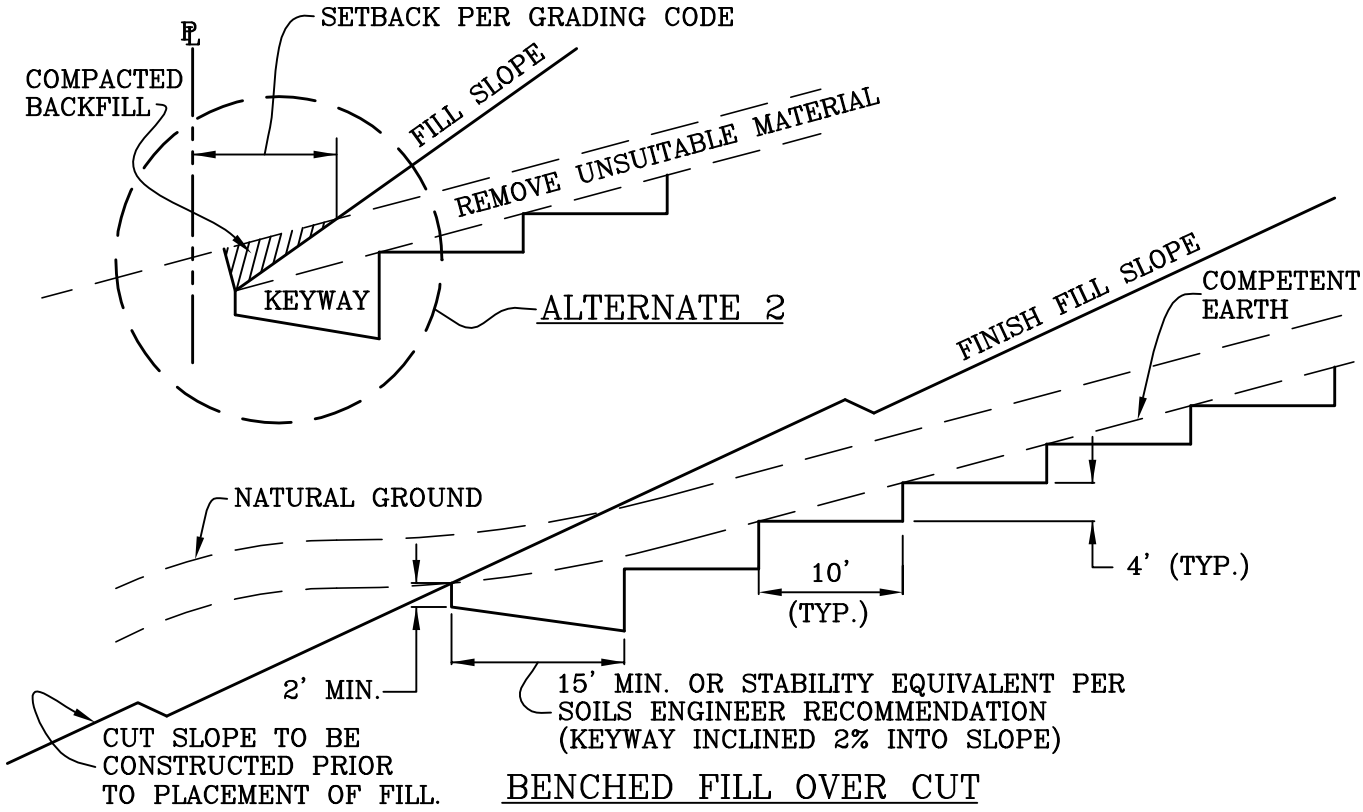

BENCHED FILL OVER CUT

CITY OF MISSION VIEJO

MISSION VIEJO CALIFORNIA	BENCHING FOR COMPACTED FILL	STANDARD PLAN NO. 440
	Robert Henderson 9-23-03	
	APPROVED RCE 30190 DATE	SHT 1 OF 1

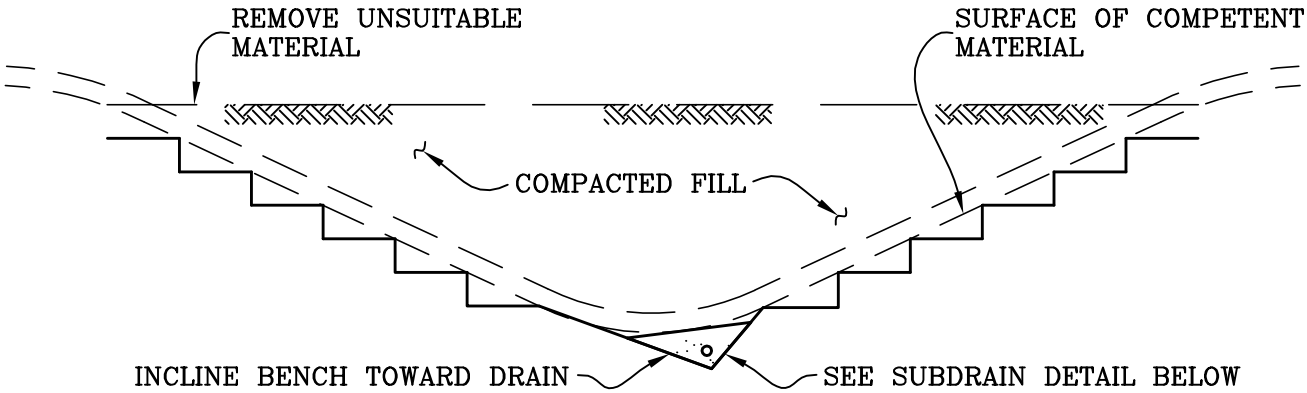

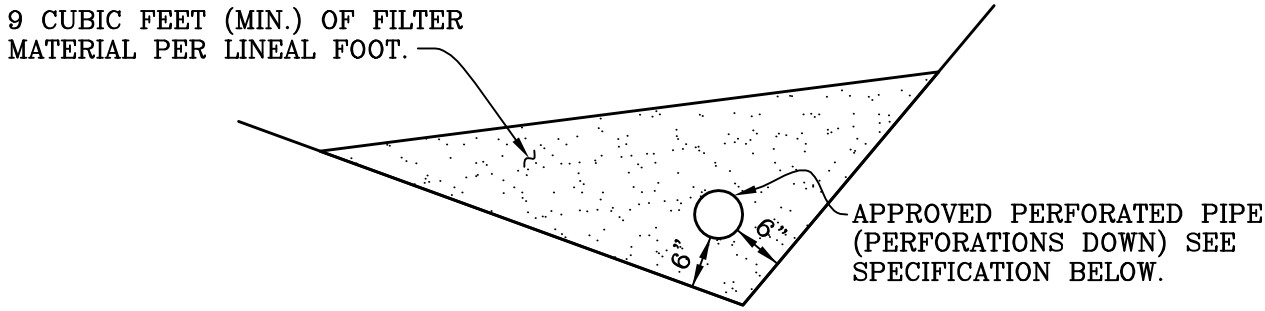

SUBDRAIN DETAIL

NOTES:

1. PIPE SPECIFICATIONS: DRAIN PIPE SHALL BE A MINIMUM OF 4" DIAMETER (6" MIN. FOR RUNS OF 500' OR GREATER AS RECOMMENDED BY THE SOILS ENGINEER). PIPE SPECIFICATIONS SHALL CONFORM TO THE STANDARD SPECIFICATIONS FOR PUBLIC WORKS CONSTRUCTION OR AS RECOMMENDED BY THE SOILS ENGINEER AND APPROVED BY THE CITY ENGINEER.

2. FILER MATERIAL SHALL MEET THE FOLLOWING SPECIFICATIONS OR AS RECOMMENDED BY THE SOILS ENGINEER AND APPROVED BY THE CITY ENGINEER.

SIEVE SIZE	PERCENTAGE PASSING
1"	100
3/4"	90–100
3/8"	40–100
NO. 4	25–40
NO. 8	18–33
NO. 30	5–15
NO. 50	0–7
NO. 200	0–3

CITY OF MISSION VIEJO

CANYON SUBDRAIN

STANDARD PLAN NO.

441

9-23-03

APPROVED RCE 30190 DATE

SHT 1 OF 1

MINIMUM DESILTING BASIN STANDARD
GENERAL NOTES

A. PURPOSE OF A DESILTING BASIN.

DESILTING BASINS ARE USED TO PROTECT DOWNSTREAM AREAS FROM SEDIMENT DAMAGE BY TRAPPING SEDIMENT-LADEN RUNOFF FROM UPSTREAM AREAS AND SETTLING OUT DAMAGING AMOUNTS OF SEDIMENT. DESILTING BASINS SHOULD BE LOCATED SO THAT FAILURE OR THE BASIN STRUCTURE WILL NOT PRESENT A DANGER TO LIFE OR PROPERTY.

B. HOW A DESILTING BASIN OPERATES.

DESILTING BASINS OPERATE BY INTERCEPTING SEDIMENT-LADEN RUNOFF AND RETAINING IT LONG ENOUGH FOR MOST OF THE DAMAGE-CAUSING SEDIMENT TO SETTLE OUT. THE RETENTION TIME REQUIRED IS PROPORTIONAL TO VELOCITY AND TURBULENCE IN THE BASIN AND INVERSELY PROPORTIONAL TO PARTICLE SIZE.

C. DESIGN CONSIDERATIONS.

1. MINIMAL EROSION PROBLEMS MAY BE HANDLED BY THE USE OF SANDBAG DIKE CONSTRUCTION, SILT FENCES OR STRAWBALE BARRIERS IF APPROVED BY THE CITY ENGINEER.

2. SIZING OF BASIN SHALL BE BASED ON THE TOTAL DRAINAGE AREA TRIBUTARY TO THE BASIN. THE METHOD OUTLINED ON SHEET 5 MAY BE USED TO ESTIMATE VOLUME. IF THIS METHOD IS NOT USED, THE PROJECT ENGINEER SHALL JUSTIFY HIS DESIGN WITH ADEQUATE CALCULATIONS.

3. THE COMBINED PIPE AND SPILLWAY OUTFLOW SHALL NOT EXCEED THE DOWNSTREAM CAPACITY NOR INCREASE THE DOWNSTREAM SEDIMENT LOADS.

4. BASIN MUST BE ACCESSIBLE FOR CLEANOUT DURING SATURATED GROUND CONDITIONS.

5. TO REDUCE TURBULENCE IN THE BASIN, THE BASIN SHALL HAVE AN ENERGY DISSIPATER AT ITS UPSTREAM END AS APPROVED BY THE CITY ENGINEER.

6. THE BASIN SHALL BE LOCATED FOR EFFECTIVELY ACCOMPLISHING ITS PURPOSE, IN ACCORDANCE WITH ENGINEERED PLANS MEETING THE APPROVAL OF THE CITY ENGINEER.

7. BEYOND CERTAIN LIMITATIONS OF EMBANKMENT HEIGHT AND STORAGE CAPACITY, THE DESIGN OF THE BASIN WILL COME UNDER THE JURISDICTION OF, AND REQUIRE THE APPROVAL OF, THE CALIFORNIA DEPARTMENT OF WATER RESOURCES, DIVISION OF SAFETY OF DAMS, 1416 NINTH STREET, P.O. BOX 388, SACRAMENTO, CA 95802, 916-445-7606 (SEE EXHIBIT 1 ON SHEET 2.)

8. INLET TRASH RACKS SHALL BE USED WHERE APPROPRIATE TO REDUCE INTAKE OF LARGE DEBRIS.

CITY OF MISSION VIEJO

MISSION VIEJO CALIFORNIA 1988	DESILTING BASIN	STANDARD PLAN NO. 450
	Roger Henderson 9-23-03	
	APPROVED RCE 30190 DATE	SHT 1 OF 8

JURISDICTIONAL DAM SIZE

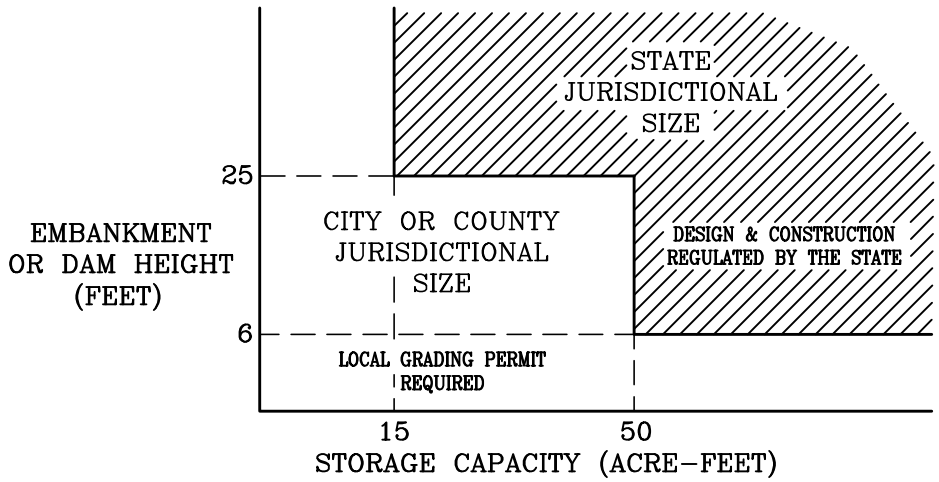

EXHIBIT 1

D. STORAGE

1. STORAGE CAPACITY SHALL BE THE VOLUME BELOW THE TOP OF THE PIPE RISER, AND SHALL BE BASED ON THE AVERAGE SITE SLOPE AND LENGTH OF THE LONGEST FLOW PATH IN THE AREA TRIBUTARY TO THE BASIN. SEE GRAPH ON SHEET 5 FOR DETAILS.

2. THE DESIGN SHALL PROVIDE OPPORTUNITY FOR PERIODIC CLEANOUT IN ORDER TO MAINTAIN BASIN CAPACITY REQUIREMENTS. THE MAXIMUM ALLOWABLE DEPOSITED SEDIMENT BEFORE CLEANOUT SHALL BE 1/2 FULL OR AS DETERMINED BY THE CITY ENGINEER AND PAINTED ON THE PIPE RISER.

3. SEDIMENT FROM BASIN CLEANOUT OPERATIONS MUST BE DISPOSED OF IN SUCH A MANNER AS TO PREVENT ITS RETURN INTO THE DESILTING BASIN OR ITS MOVEMENT INTO DOWNSTREAM AREAS DURING SUBSEQUENT RUNOFFS.

4. THE CONTRACTOR SHALL BE RESPONSIBLE AND SHALL TAKE NECESSARY PRECAUTIONS TO PREVENT PUBLIC TRESPASS ONTO AREAS WHERE IMPOUNDED WATER CREATES A HAZARDOUS CONDITION.

E. DRAIN PIPE AND RISER

1. THE MINIMUM PIPE RISER SHALL BE A 30" CORRUGATED STEEL PIPE (C.S.P.) 14 GA., OR AN ALTERNATE APPROVED BY THE CITY ENGINEER . RISER TO HAVE A CROSS-SECTIONAL AREA AT LEAST 1.5 TIMES THE CROSS-SECTIONAL AREA OF THE HORIZONTAL DRAIN PIPE.

2. THE MINIMUM DRAIN PIPE SHALL BE A 12" C.S.P., 14" GA., OR AN ALTERNATE APPROVED BY THE CITY ENGINEER.

CITY OF MISSION VIEJO

	DESILTING BASIN	STANDARD PLAN NO. 450
	Roger Henderson 9-23-03	
	APPROVED RCE 30190 DATE	SHT 2 OF 8

3. THE UPPERMOST ELEVATION OF THE RISER SHALL BE SUCH THAT FULL FLOW WILL BE GENERATED BEFORE THERE IS DISCHARGE OVER THE EMERGENCY SPILLWAY AND AT LEAST ONE FOOT BELOW THE TOP OF THE EMERGENCY SPILLWAY.

4. THE RISER SHALL BE PERFORATED WITH 1/2" x 12" (MAX.) SLOTS OR 1/2" TO 1-1/2" DIAMETER HOLES, 10 TO 12 INCHES ON CENTER AND STAGGERED. HOLES CUT WITH A WELDING TORCH ARE ACCEPTABLE. THE SMALL HOLES SHALL BE USED ON THE LOWER PORTIONS OF THE RISER.

5. THE DRAIN PIPE SHALL BE PLACED ON A FIRM FOUNDATION.

6. THE RISER SHALL HAVE A BASE ATTACHED WITH A WATERTIGHT CONNECTION AND SHALL HAVE SUFFICIENT WEIGHT TO PREVENT FLOTATION OF THE RISER. TWO RECOMMENDED METHODS ARE:

   a. A SQUARE CONCRETE BASE 18 INCHES THICK WITH THE RISER EMBEDDED SIX INCHES INTO THE BASE. EACH SIDE OF THE BASE WILL BE ONE DIAMETER OF THE RISER PLUS 24 INCHES.

   b. A 1/4 INCH MINIMUM THICKNESS STEEL PLATE WELDED ALL AROUND THE BASE OF THE RISER TO FORM A WATERTIGHT CONNECTION. THE PLATE SHALL BE SQUARE WITH EACH SIDE EQUAL TO TWO TIMES THE RISER DIAMETER. THE PLATE SHALL HAVE TWO FEET OF STONE, GRAVEL, OR TAMPED EARTH PLACED ON IT TO PREVENT FLOTATION.

7. A GRATE CONSISTING OF #4 REBAR, 6 INCHES ON CENTER SHALL BE WELDED TO THE TOP OF THE RISER.

8. ANTI-SEEP COLLARS ARE REQUIRED AT 10' INTERVALS FOR PIPE UNDER THE EMBANKMENT (SEE SHEET 8). THE COLLARS SHALL BE WELDED TO THE PIPE.

9. DISCHARGE SHALL BE TO A PAVED STREET, CHANNEL, OR APPROVED DRAINAGE.

F. EMERGENCY SPILLWAY

1. THE SPILLWAY SHALL BE LINED WITH 3-INCH THICK GUNITE, 4-INCH THICK CONCRETE, (EACH REINFORCED WITH 6"x6"-W1.4xW1.4 WELDED WIRE MESH) OR MATERIAL SUCH AS PLASTIC DESIGNED TO FIT THE SITE CONDITION BY THE PROJECT ENGINEER AND APPROVED BY THE CITY ENGINEER EXTENDING A MINIMUM OF 3 FEET DOWN THE UPSTREAM FACE OF THE EMBANKMENT. SPILLWAY WILL BE A MINIMUM OF 18 INCHES DEEP; WITH 1-1/2:1 SIDE SLOPES.
2. THE SPILLWAY SHALL BE DESIGNED TO PROVIDE ONE SQUARE FOOT OF CROSS-SECTIONAL AREA FOR EACH GROSS ACRE TRIBUTARY DRAINAGE AREA.

3. THE MAXIMUM HEIGHT OF THE EARTH DIKE SHALL BE 6' FROM THE TOE OF THE UPSTREAM SLOPE TO THE SPILLWAY CREST.

CITY OF MISSION VIEJO

DESILTING BASIN

STANDARD PLAN NO.

450

Robert Henderson 9-23-03

APPROVED RCE 30190 DATE

G. FREEBOARD

1. FREEBOARD IS THE VERTICAL DISTANCE BETWEEN THE ELEVATION OF THE WATER SURFACE IN THE POND WHEN SPILLWAY IS DISCHARGING AT DESIGNED DEPTH AND THE ELEVATION OF THE TOP OF THE EMBANKMENT AFTER ALL SETTLEMENT HAS TAKEN PLACE.

2. MINIMUM FREEBOARD SHALL BE 1.0 FOOT FOR BASINS WHERE THE MAXIMUM LENGTH OF THE POND IS LESS THAN 660 FEET. FOR MAXIMUM POND LENGTHS OF 660 FEET OR MORE, THE MINIMUM FREEBOARD SHALL BE DETERMINED BY THE CITY ENGINEER.

H. EMBANKMENT

1. THE EMBANKMENT MATERIAL SHALL BE TAKEN FROM BORROW AREAS AS STATED ON THE PLANS. ALL BORROW AREAS OUTSIDE THE POOL SHALL BE GRADED, SEEDED AND LEFT IN SUCH A MANNER THAT THEY ARE WELL-DRAINED AND PROTECTED FROM EROSION.

2. THE MATERIAL SHALL BE FREE OF ALL SOD, ROOTS, WOODY VEGETATION, LARGE ROCK (EXCEEDING 12 INCHES IN DIAMETER), AND OTHER DEBRIS.

3. THE EMBANKMENT SHALL BE CONSTRUCTED TO AN ELEVATION WHICH PROVIDES FOR ANTICIPATED SETTLEMENT TO DESIGN ELEVATION (ALLOW 10% FOR SETTLEMENT).

4. THE FOUNDATION FOR THE EMBANKMENT SHALL BE SCARIFIED PRIOR TO PLACEMENT OF FILL.

5. PLACEMENT OF FILL MATERIAL SHALL BE STARTED AT THE LOWEST POINT OF THE FOUNDATION AND SHALL BE PLACED IN 6-INCH MAXIMUM LIFTS WHICH ARE TO BE CONTINUOUS OVER THE ENTIRE LENGTH OF THE FILL AND APPROXIMATELY HORIZONTAL. EMBANKMENT SHALL HAVE A RELATIVE COMPACTION OF AT LEAST 90%.

6. EMBANKMENT SIDE SLOPES SHALL BE NO STEEPER THAN 2:1.

I. SITE PREPARATION

1. THE EMBANKMENT FOUNDATION AREA AND RESERVOIR AREA SHALL BE CLEARED OF ALL TREES, STUMPS, ROOTS, BRUSH, BOULDERS, SOD, AND DEBRIS.

2. ALL TOPSOIL CONTAINING EXCESSIVE AMOUNTS OF ORGANIC MATTER SHALL BE REMOVED

J. EROSION CONTROL PLAN

A SILTATION CONTROL PROGRAM AND PLAN FOR ANY PROPOSED DEVELOPMENT SHALL BE SUBMITTED FOR REVIEW AND APPROVED BY THE CITY ENGINEER PRIOR COMMENCEMENT OF GRADING.

CITY OF MISSION VIEJO

MISSION VIEJO CALIFORNIA 1988	DESILTING BASIN	STANDARD PLAN NO. 450
	Roger Henderson 9-23-03	
	APPROVED RCE 30190 DATE	SHT 4 OF 8

SL FACTORS FOR SEDIMENT YIELD EQUATION

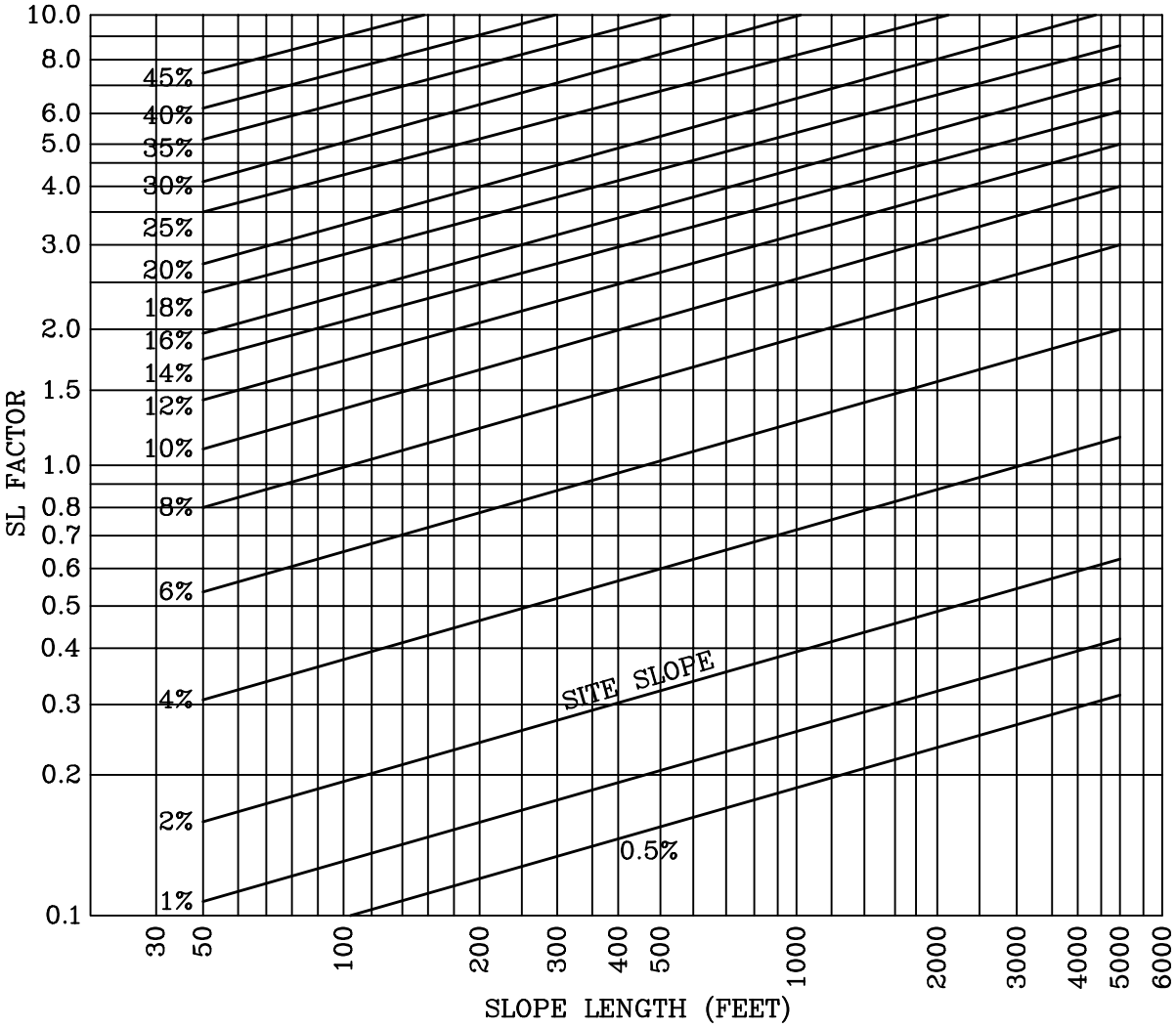

SEDIMENT YIELD = 16.4 SL*

EXAMPLE: SLOPE LENGTH = 1000 FEET
SITE SLOPE = 8%
GRADED AREA = 56 ACRES

FROM GRAPH IT CAN BE DETERMINED THAT SL = 1.8
SEDIMENT YIELD = 16.4 x 1.8 = 30 C.Y./ACRE
TOTAL SEDIMENT = 30 x 56 = 1680 C.Y.
BASIN SIZE = 1700 C.Y.

* BASED ON UNIVERSAL SOIL LOSS EQUATION FOR ORANGE COUNTY FIELD CONDITIONS.

CITY OF MISSION VIEJO

MISSION VIEJO CALIFORNIA	DESILTING BASIN	STANDARD PLAN NO. 450
	Robert Henderson 9-23-03 APPROVED RCE 30190 DATE	SHT 5 OF 8

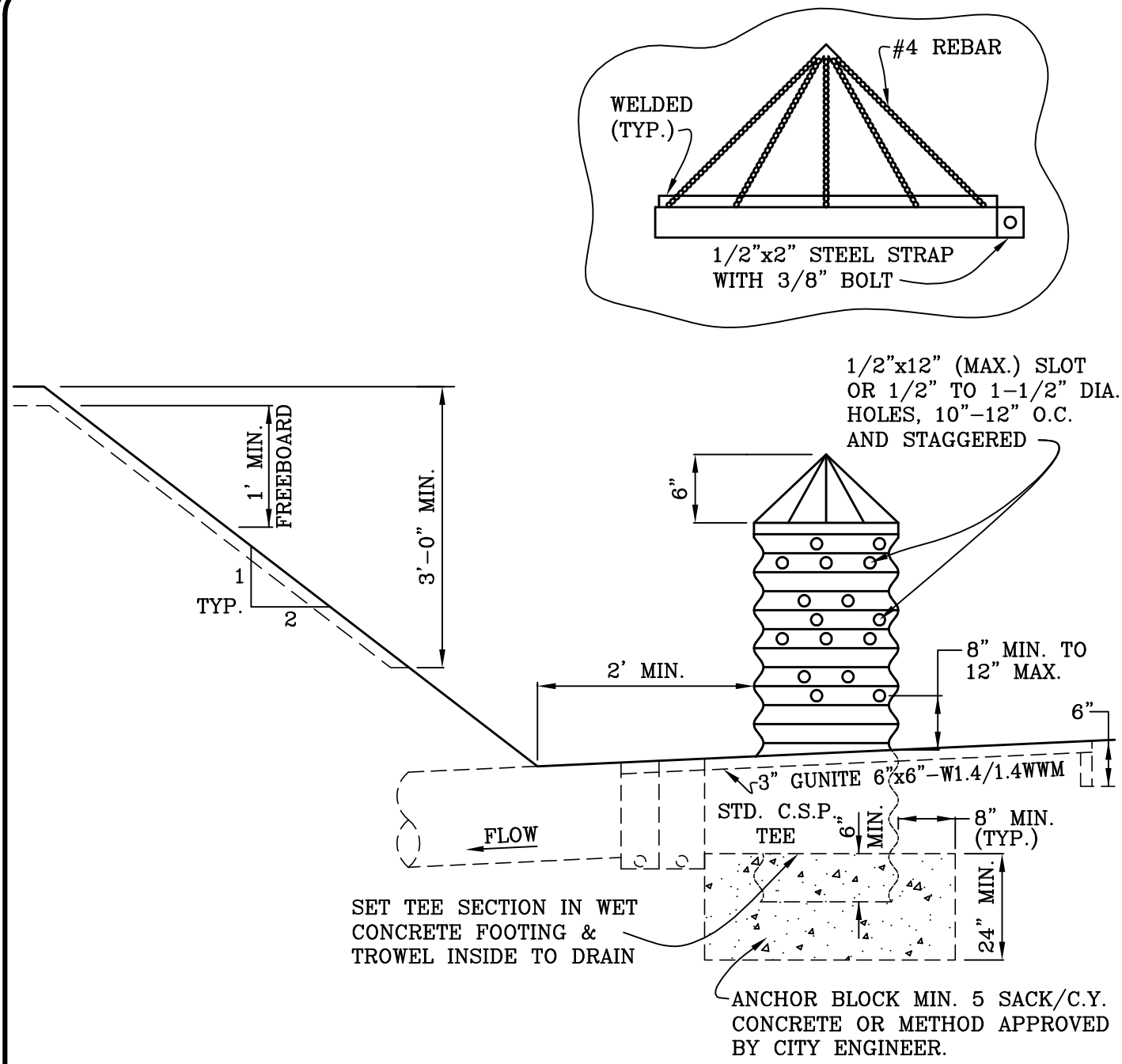

DRAIN PIPE AND RISER

NO SCALE

CITY OF MISSION VIEJO

DESILTING BASIN

STANDARD PLAN NO.

450

9-23-03

APPROVED RCE 30190 DATE

SHT 6 OF 8

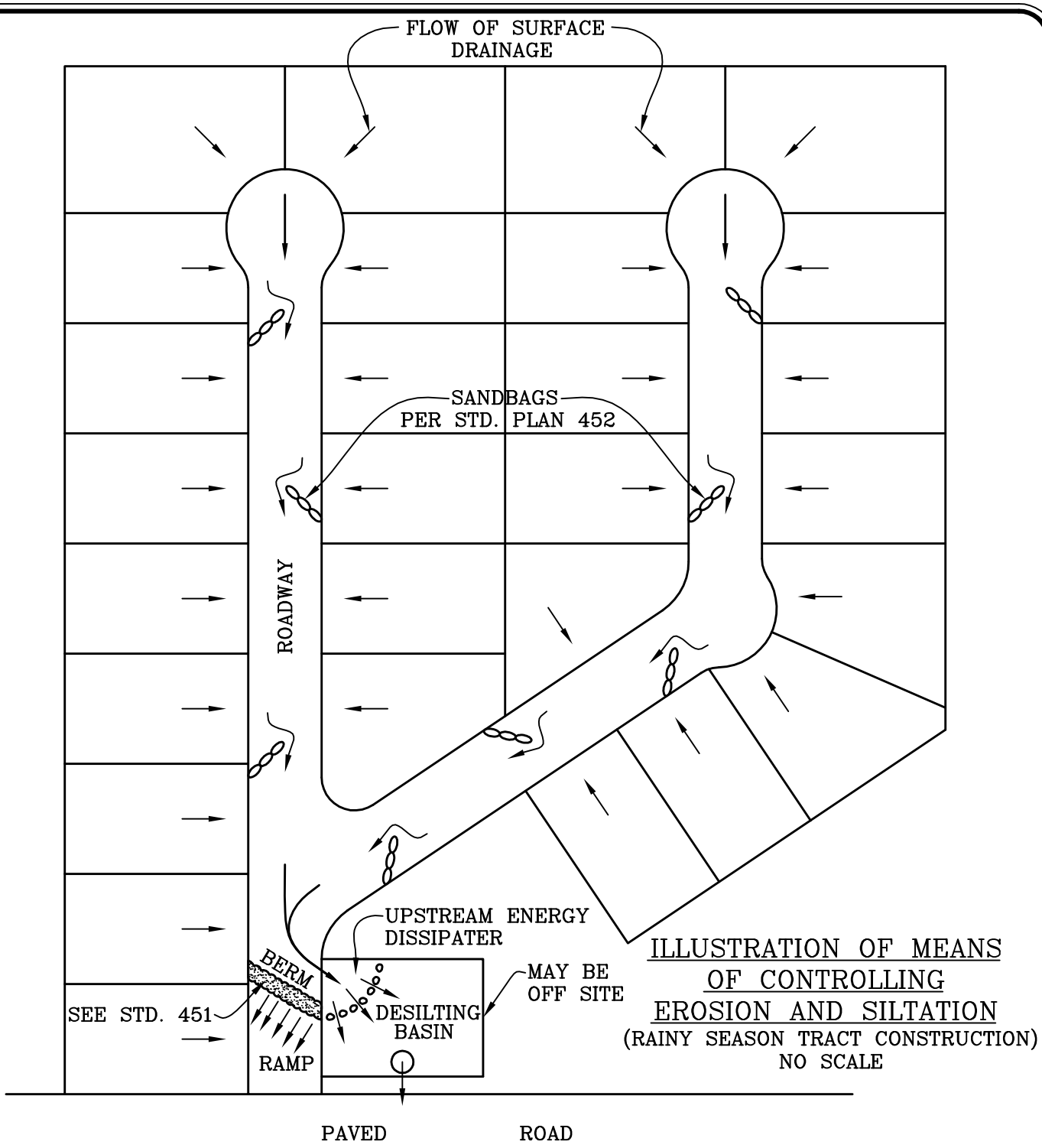

ILLUSTRATION OF MEANS OF CONTROLLING EROSION AND SILTATION
(RAINY SEASON TRACT CONSTRUCTION)
NO SCALE

CITY OF MISSION VIEJO

MISSION VIEJO CALIFORNIA	DESILTING BASIN	STANDARD PLAN NO. 450
	Robert Henderson 9-23-03	
	APPROVED RCE 30190 DATE	SHT 7 OF 8

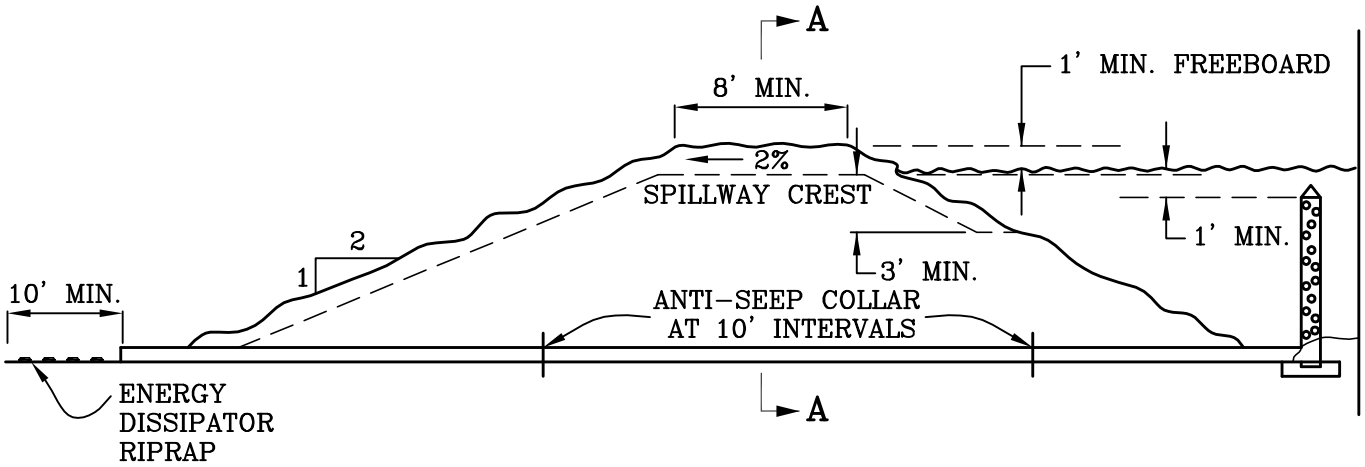

SECTION THROUGH EMBANKMENT
NO SCALE

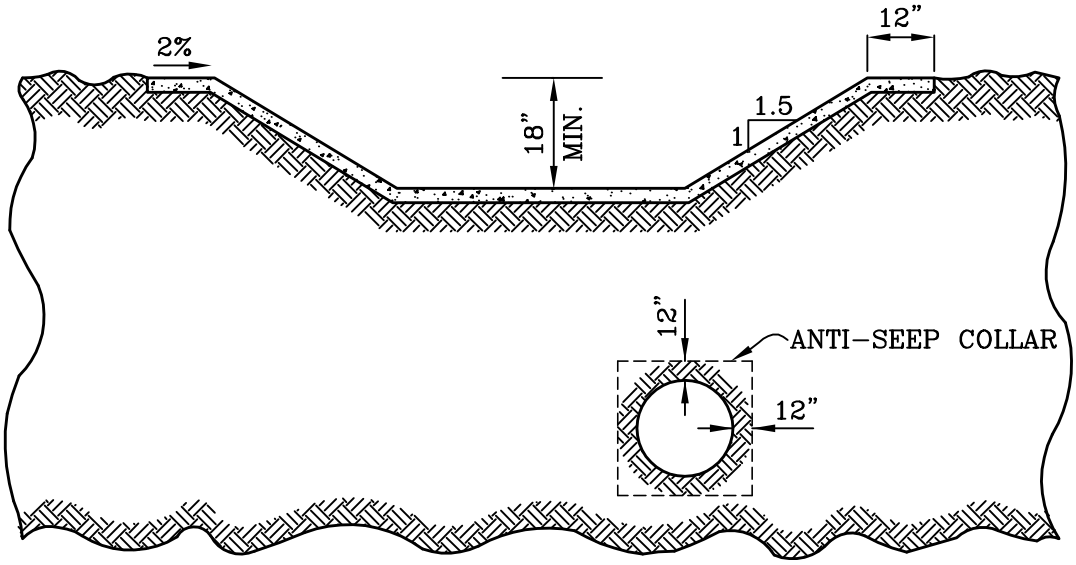

SECTION A-A

CITY OF MISSION VIEJO

	DESILTING BASIN	STANDARD PLAN NO. 450
	APPROVED RCE 30190 DATE 9-23-03	SHT 8 OF 8

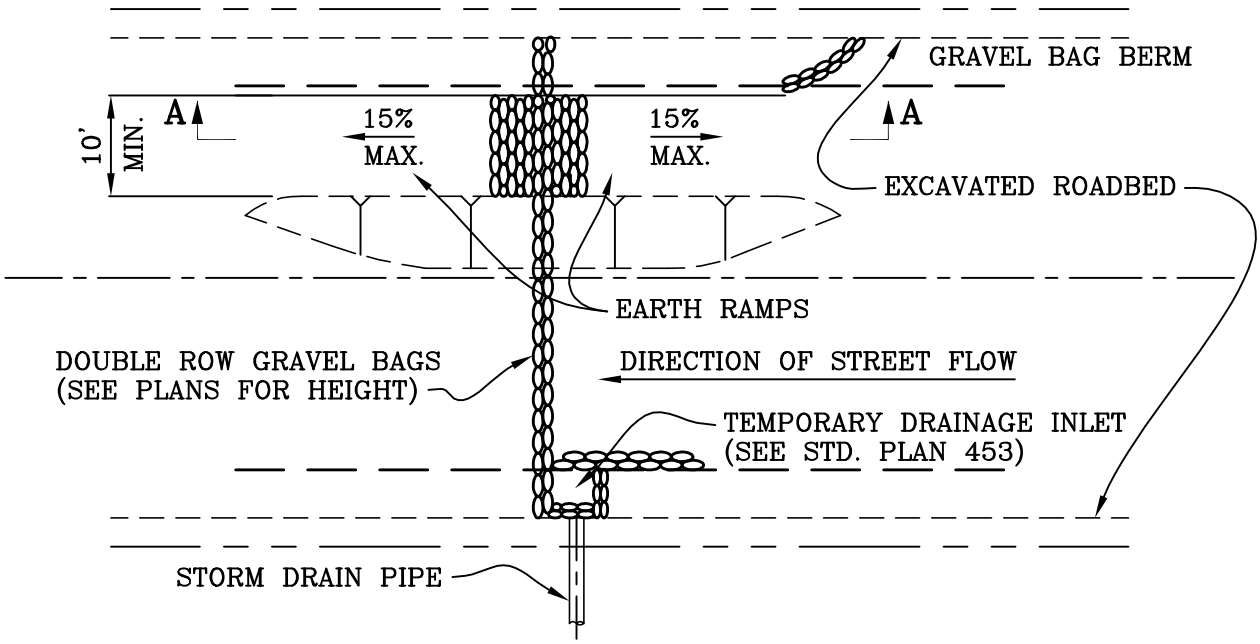

PLAN

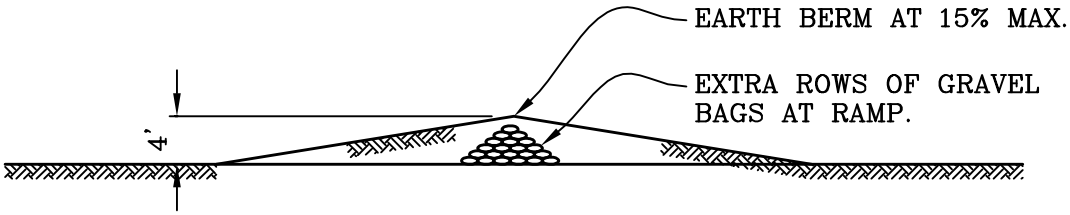

SECTION A–A

NOTES:
1. THE STORAGE CAPACITY SHALL BE IN ACCORDANCE WITH STD. PLAN 450 & THE DIMENSIONS OF THE STORAGE AREA SHALL BE SHOWN ON THE EROSION CONTROL PLAN.
2. GRAVEL BAGS ARE ENCOURAGED OVER SANDBAGS AND MAY BE REQUIRED IN AREAS WHICH ARE PARTICULARLY SENSITIVE TO SEDIMENT DEPOSITION.
3. THIS STANDARD DETAIL SHALL BE USED AS SHOWN ON THE APPROVED EROSION CONTROL PLAN.

CITY OF MISSION VIEJO

MISSION VIEJO CALIFORNIA	STREET DESILTING BASIN VEHICLE ACCESS RAMP	STANDARD PLAN NO. 451
	Roger Henderson 9-23-03	
	APPROVED RCE 30190 DATE	SHT 1 OF 1

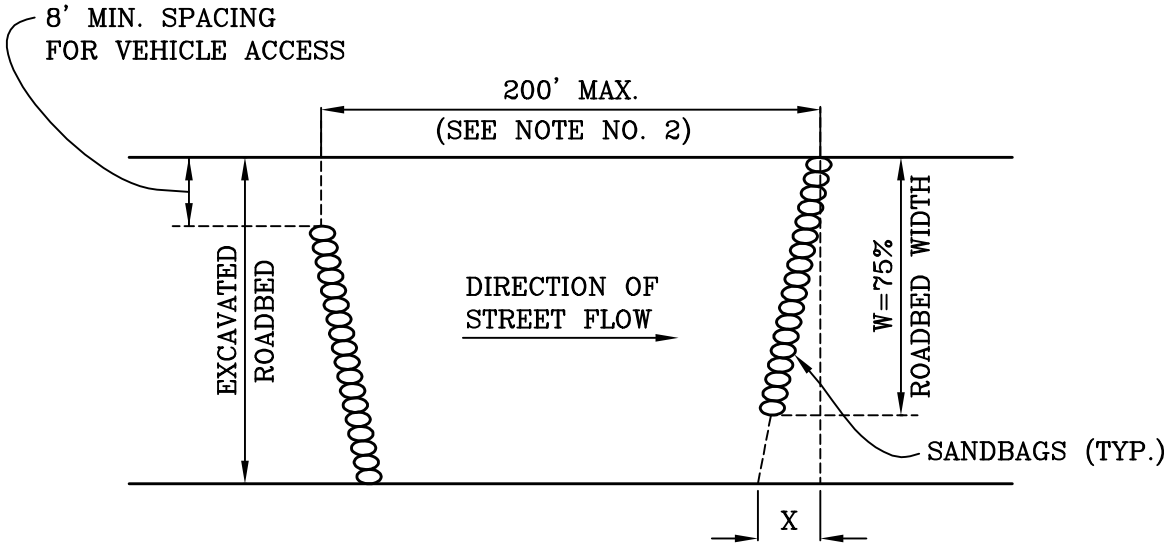

PLAN

W	X
20'–30'	5'
31'–40'	7'
41'–50'	9'
51'–60'	10.5'
61'–70'	12'

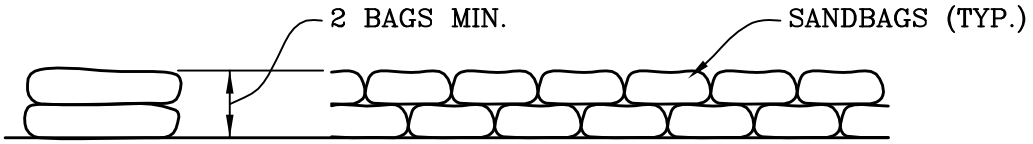

TYPICAL SECTION TYPICAL ELEVATION

NOTES:
1. GRAVEL BAGS ARE ENCOURAGED OVER THE USE OF SANDBAGS AND MAY BE REQUIRED IN AREAS WHICH ARE PARTICULARLY SENSITIVE TO SEDIMENT DEPOSITION.
2. REQUIREMENTS FOR AND SPACING OF VELOCITY REDUCERS FOR STREETS WITH GRADES OF LESS THAN 4% SHALL BE AS SHOWN ON THE APPROVED EROSION CONTROL PLAN.
3. THIS STANDARD DETAIL SHALL BE USED AS SHOWN ON THE APPROVED EROSION CONTROL PLAN.

CITY OF MISSION VIEJO

STREET CHEVRON VELOCITY REDUCER

STANDARD PLAN NO. 452

Kevin Henderson 9-23-03

APPROVED RCE 30190 DATE

SHT 1 OF 1

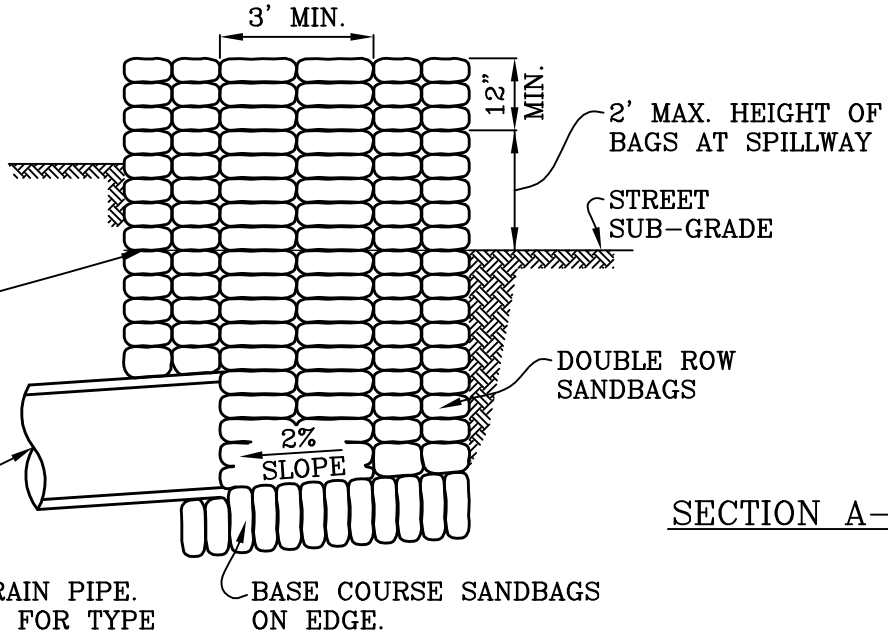

SECTION A–A

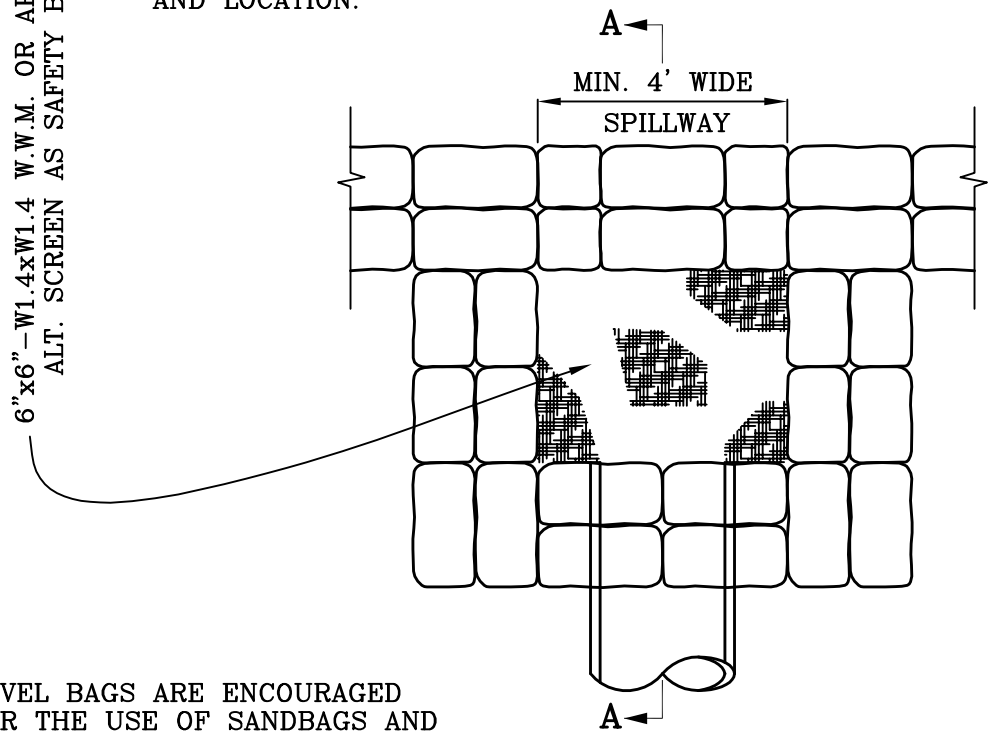

PLAN

NOTES:
1. GRAVEL BAGS ARE ENCOURAGED OVER THE USE OF SANDBAGS AND MAY BE REQUIRED IN AREAS WHICH ARE PARTICULARLY SENSITIVE TO SEDIMENT DEPOSITION.
2. A PORTION OF CATCH BASIN MAY BE CONSTRUCTED IN PLACE OF SANDBAGS.
3. THIS STANDARD SHALL BE USED AS SHOWN ON THE APPROVED EROSION CONTROL PLAN.

CITY OF MISSION VIEJO

TEMPORARY DRAINAGE INLET

STANDARD PLAN NO.

453

Robert Henderson 9-23-03

APPROVED RCE 30190 DATE

SHT 1 OF 1

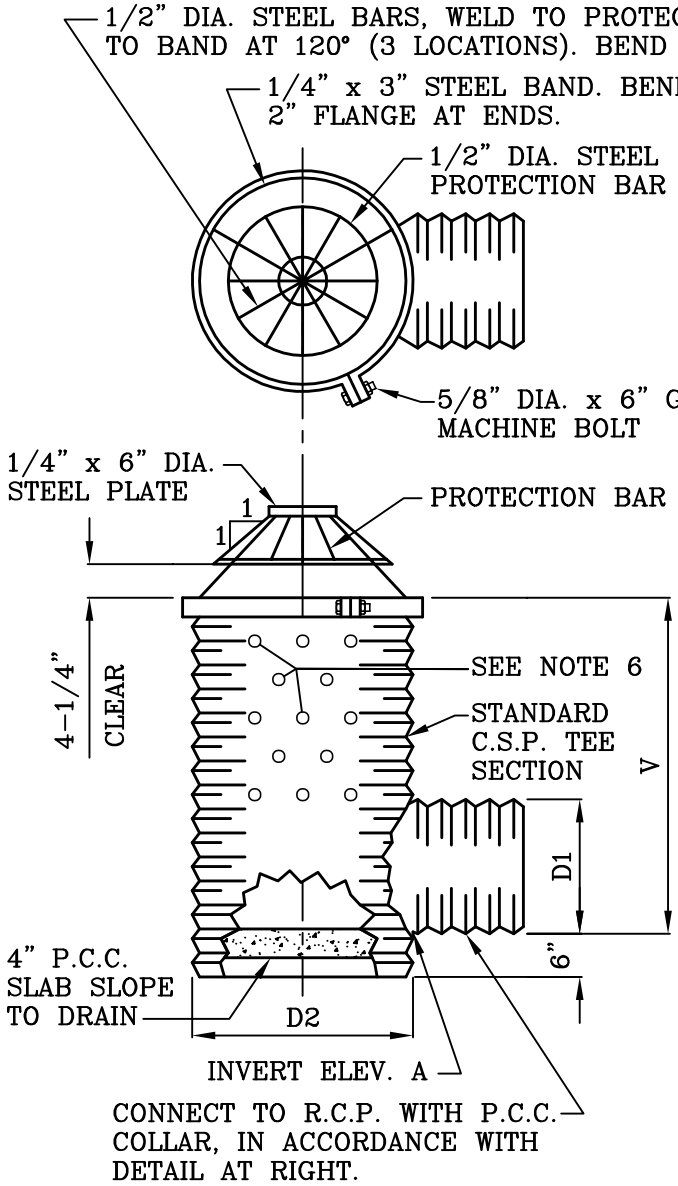

D2	C.S.P. GAUGE
18" – 27"	16
30" – 39"	14
42" – 48"	12
51" – 66"	10

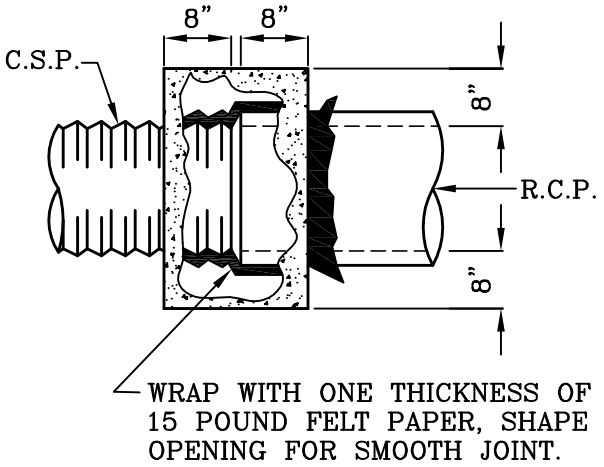

NOTES:
1. V, D1, D2, AND ELEVATION A SHALL BE SHOWN ON THE CONSTRUCTION PLANS.
2. GRATE ASSEMBLY SHALL BE FABRICATED TO FIT C.S.P. OF SIZE D2.
3. GRATE ASSEMBLY SHALL BE GALVANIZED AFTER FABRICATION.
4. R.C.P. SHALL BE SIZED TO FIT FUTURE CATCH BASIN DESIGN.
5. GRATE ASSEMBLY SHALL BE FABRICATED TO FIT THE OUTSIDE DIAMETER OF STANDARD JUNCTION STRUCTURE SHAFT IF INDICATED ON CONSTRUCTION PLANS.
6. 1/2" WIDE SHOTS OR 1/2" TO 1" ROUND HOLES.
7. D1 GAUGE SHALL BE EQUAL TO THAT OF D2.

CITY OF MISSION VIEJO

C.S.P. DROP INLET

STANDARD PLAN NO.

454

9-23-03

APPROVED RCE 30190 DATE

SHT 1 OF 1

SLOPED STREET DETAILS

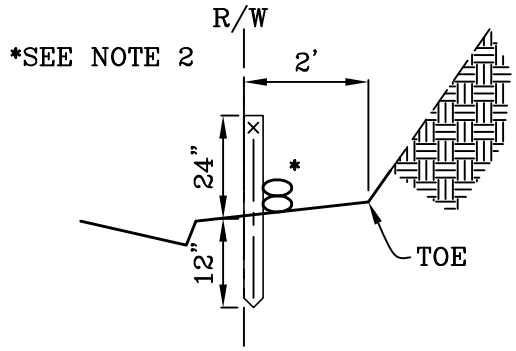

SECTION

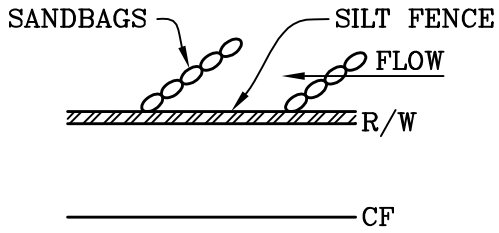

PLAN

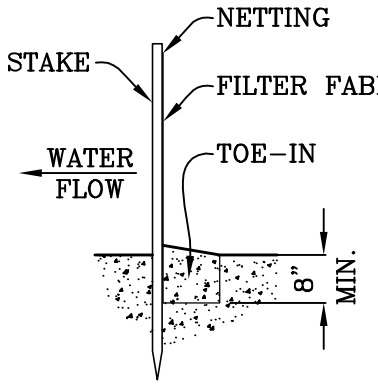

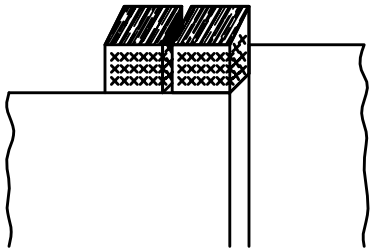

JOINING FENCES
OFFSET FENCES AS SHOWN AND TIE END STAKES TOGETHER WITH DRAW CORD.

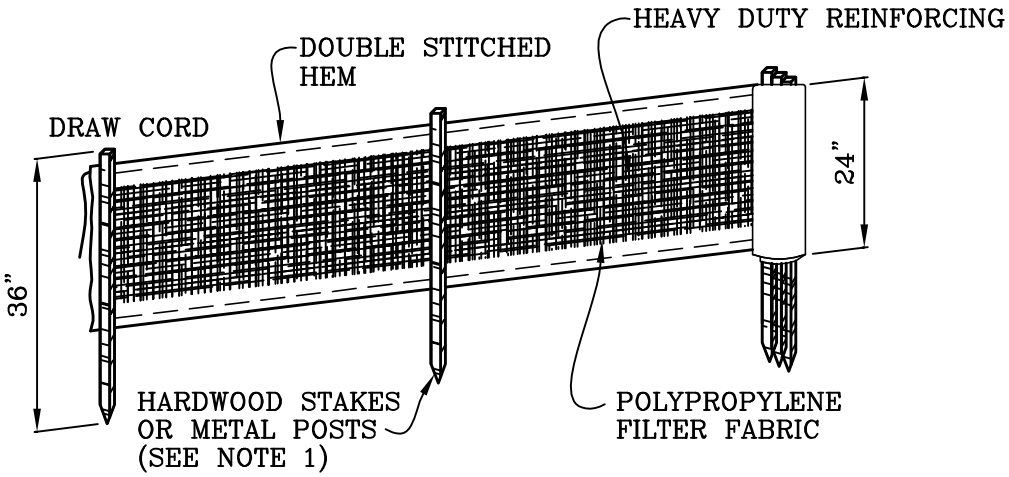

NOTES:
1. IF METAL POSTS ARE USED INSTEAD OF HARDWOOD STAKES, PROTECTIVE COVERS SHALL BE PLACED ON TOP OF POSTS.
2. GRAVEL BAGS MAY BE PLACED BEHIND SILT FENCE IF STREET IS SLOPING TO ASSIST IN RETENTION OF SILT.
3. SILT FENCES MUST BE FIELD CHECKED AND CLEANED AS REQUIRED AFTER EVERY STORM.

CITY OF MISSION VIEJO

MISSION VIEJO CALIFORNIA 1988	SILT FENCE	STANDARD PLAN NO. 455
	Roger Henderson 9-23-03	
	APPROVED RCE 30190 DATE	SHT 1 OF 1

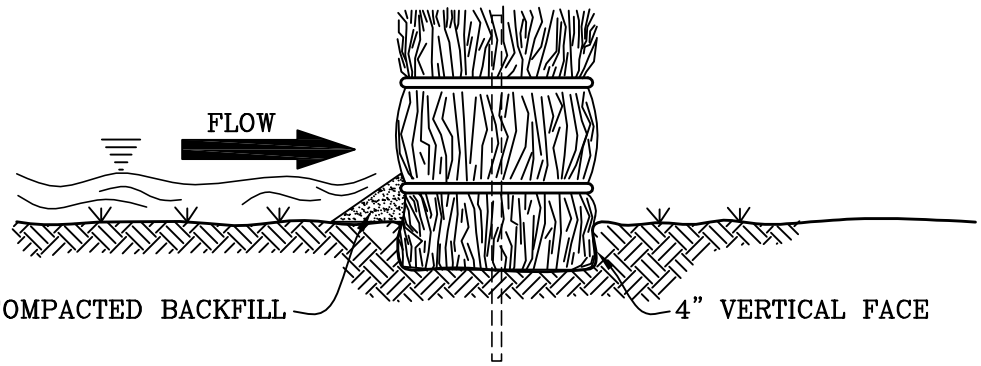

* PROMOTES ON SITE SEDIMENTATION BY CREATING A TEMPORARY POND.

BEDDING DETAIL

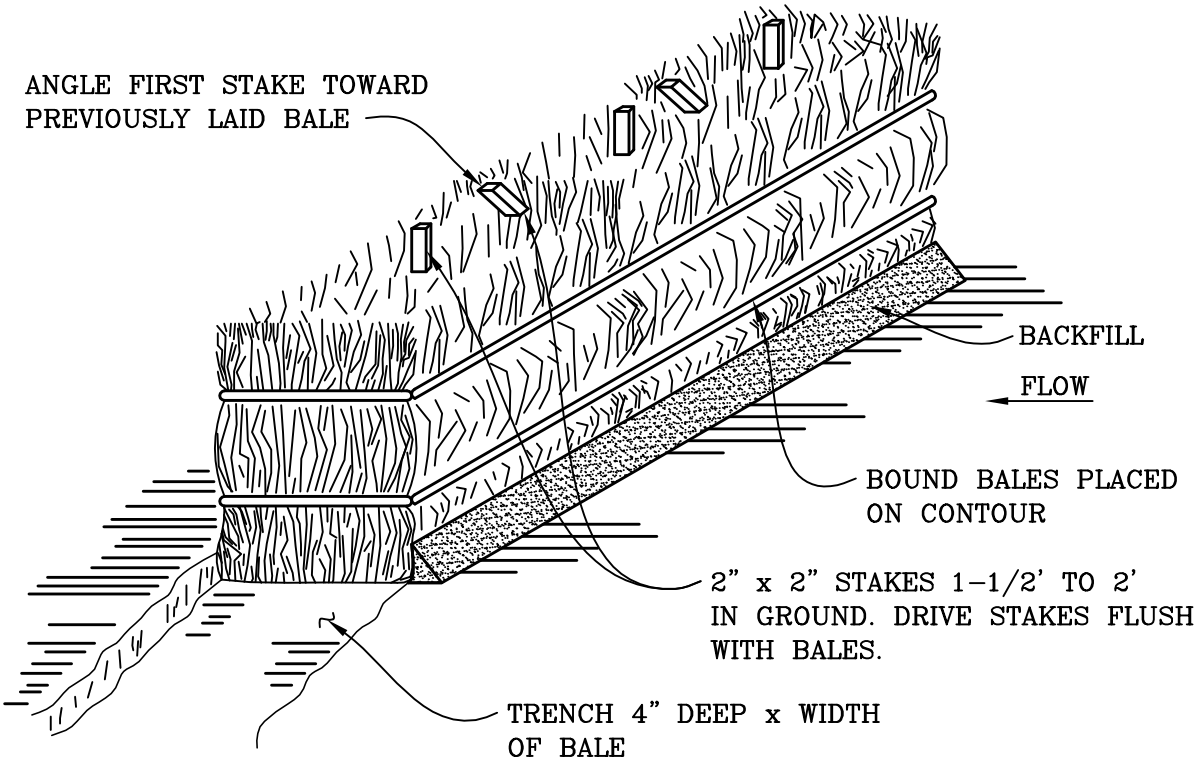

ANCHORING DETAIL

NOTES:
SUBSTITUTION OF STEEL BARS FOR WOODEN STAKES IS NOT RECOMMENDED DUE TO POTENTIAL FOR DAMAGING CONSTRUCTION EQUIPMENT.

CITY OF MISSION VIEJO

MISSION VIEJO CALIFORNIA	STRAW BALE BARRIERS	STANDARD PLAN NO. 456
	Kevin Henderson 9-23-03	
	APPROVED RCE 30190 DATE	SHT 1 OF 1

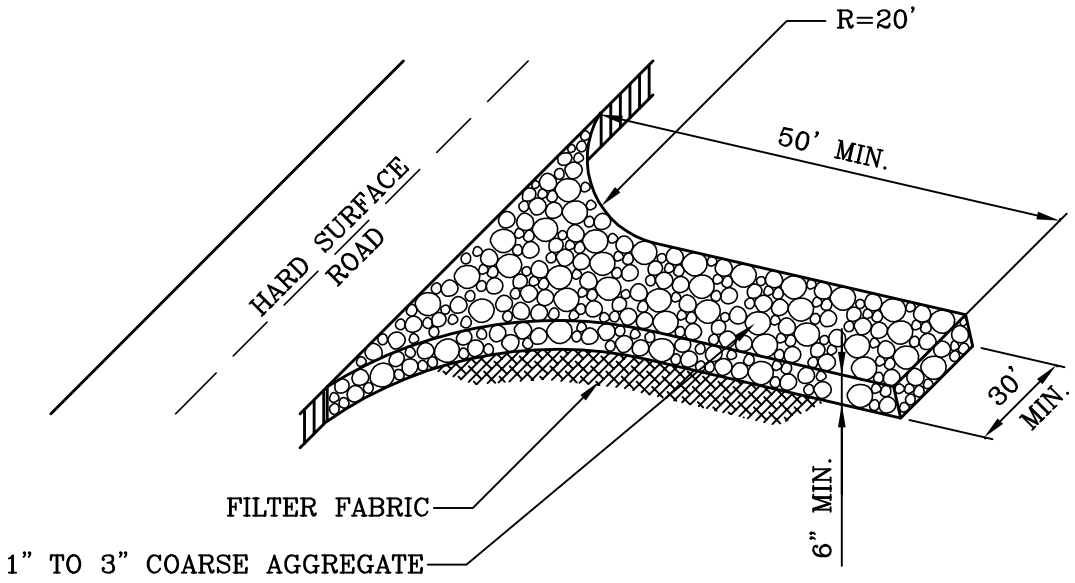

NOTES:

1. PROVIDE AMPLE TURNING RADII AS PART OF ENTRANCE.
2. ENTRANCE WILL REQUIRE PERIODIC TOP DRESSING WITH ADDITIONAL AGGREGATE.
3. AT THE OPTION OF THE CITY ENGINEER, A MINIMUM 12' LENGTH OF "TRACKCLEAN", OR EQUAL TIRE CLEANING RACKS MAY BE REQUIRED TO BE PLACED WITH THE GRAVEL AREA.

CITY OF MISSION VIEJO

STABILIZED CONSTRUCTION ENTRANCE

STANDARD PLAN NO.

457

9-23-03

APPROVED RCE 30190 DATE

SHT 1 OF 1

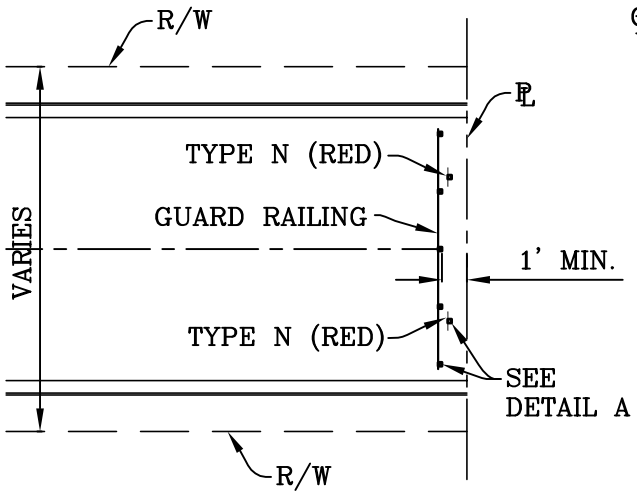

TYPICAL DEAD END
WITH GUARD RAILING

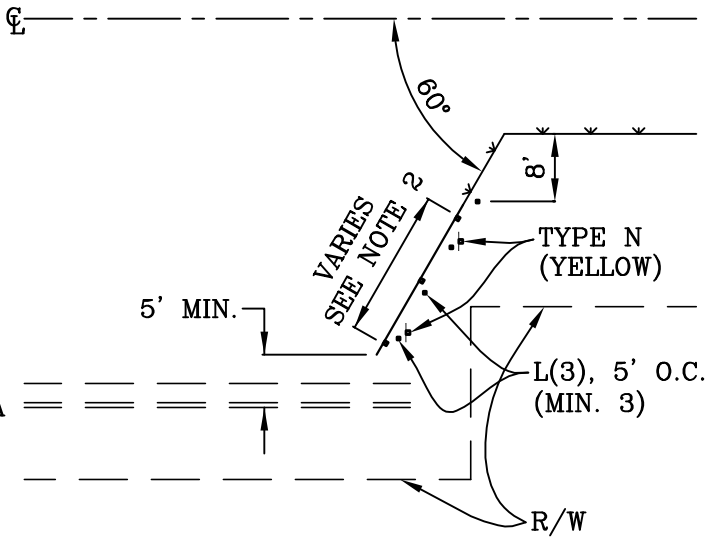

TYPICAL WIDENED SECTION
WITH GUARD RAILING

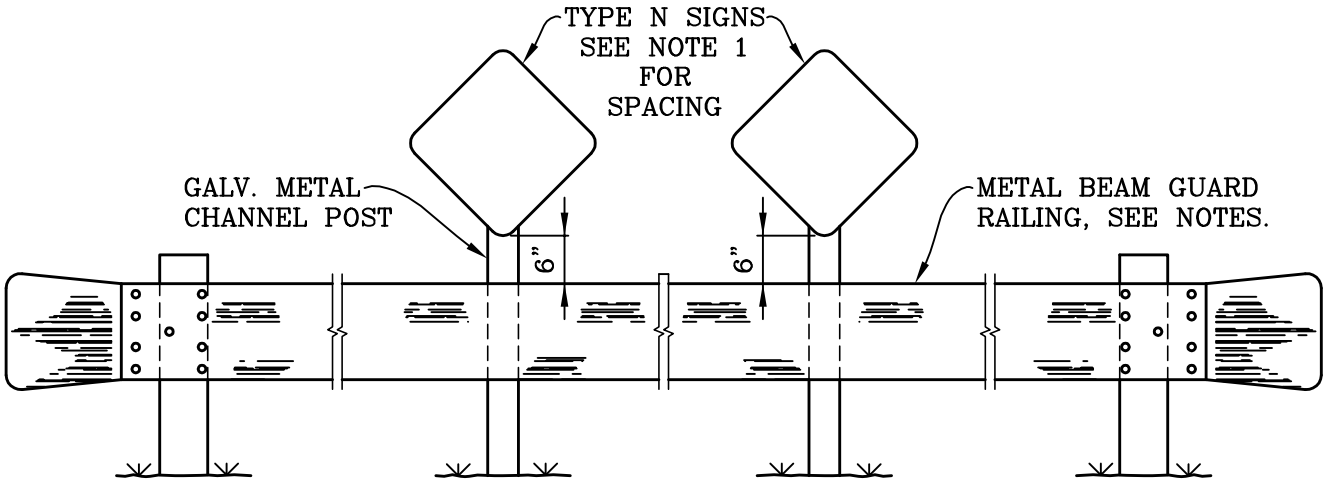

DETAIL A

NOTES:
1. ONE TYPE N SHALL BE PLACED IN THE CENTER OF EACH TRAVEL LANE IN A DEAD END SITUATION.
2. TYPE N SIGNS OR L-(3) MARKERS SHALL BE PLACED AS SHOWN AT ALL LOCATIONS. METAL BEAM GUARD RAILING SHALL BE ADDED AT LOCATIONS WHERE GREATER DAMAGE WOULD BE INFLICTED ON A VEHICLE LEAVING THE ROAD THAN STRIKING THE RAILING, OR WHERE ESSENTIAL TO PROTECT EXISTING FACILITIES FROM THE INTRUSION OF A VEHICLE.
3. LENGTH OF THE METAL BEAM GUARD RAILING SHALL BE IN MULTIPLES OF 12'-6", PLUS 1-9" FOR EACH END PIECE.
4. SEE STD. PLAN 502 FOR METAL BEAM GUARD RAILING DETAILS.

CITY OF MISSION VIEJO

DEAD END & WIDENED SECTION SIGNING

STANDARD PLAN NO.
501

9-23-03

APPROVED RCE 30190 DATE

SHT 1 OF 1

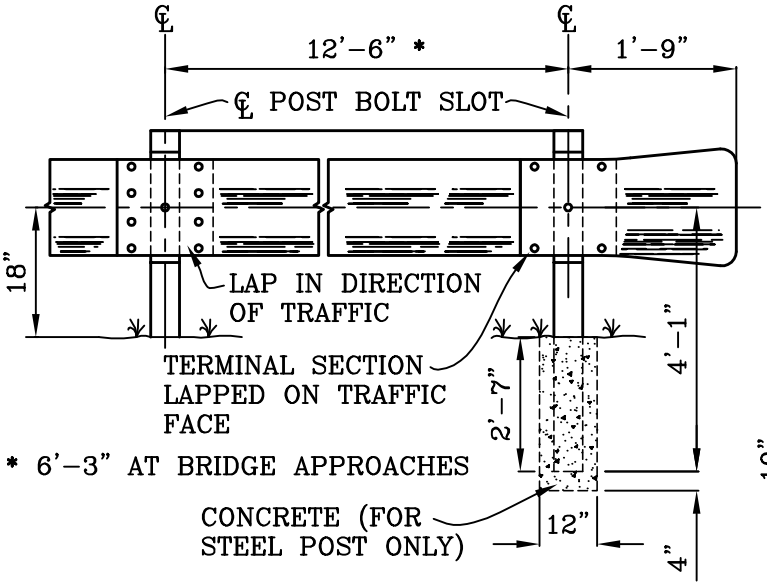

INSTALLATION

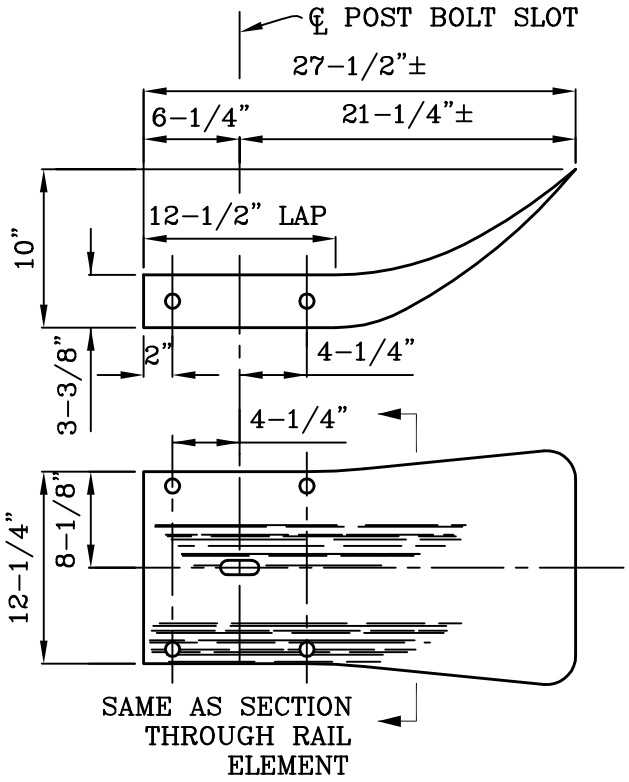

TERMINAL SECTION

NOTES:
1. GUARD RAILING FLARES AT BRIDGE APPROACHES SHALL HAVE A MINIMUM RADIUS OF 150 FT.
2. ALL DIMENSIONS ARE SUBJECT TO MANUFACTURING TOLERANCES.

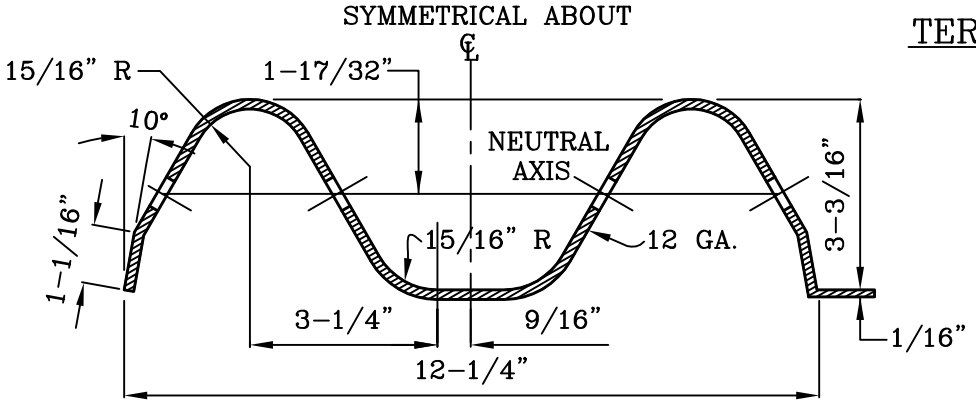

SECTION THROUGH RAIL ELEMENT

CITY OF MISSION VIEJO

METAL BEAM GUARD RAILING

STANDARD PLAN NO.

502

APPROVED | RCE 30190 | DATE 9-23-03

SHT 1 OF 2

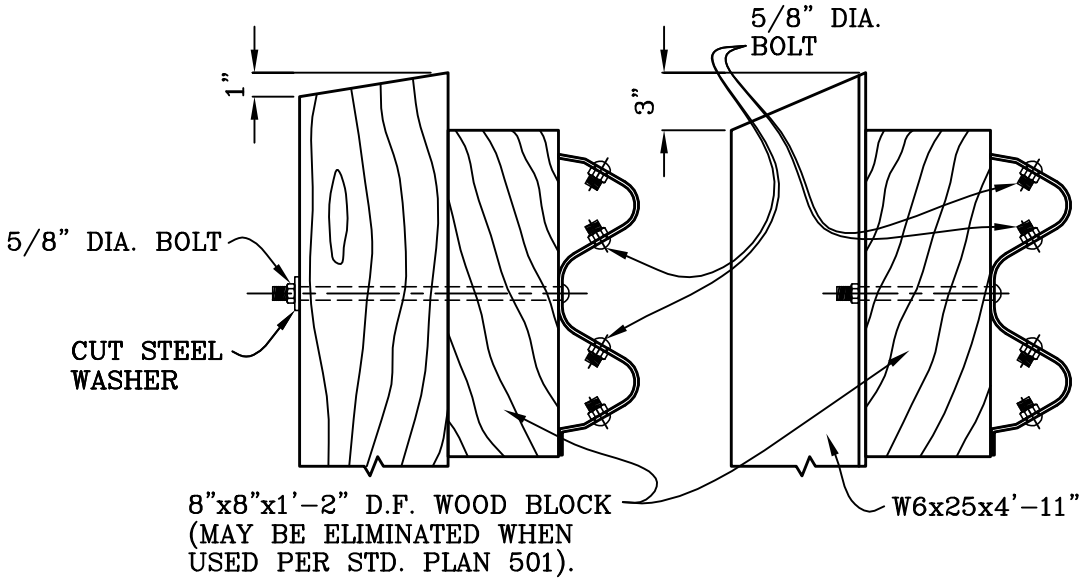

NOTE: SET STEEL RAIL POST IN 9" DIA.
HOLE & FILL WITH CONCRETE.

ARRANGEMENT OF BOLTS

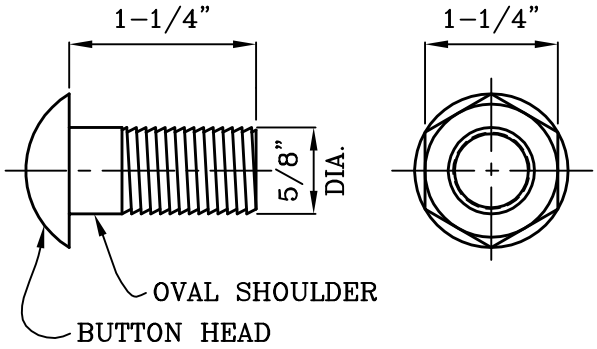

SPLICE BOLT AND NUT

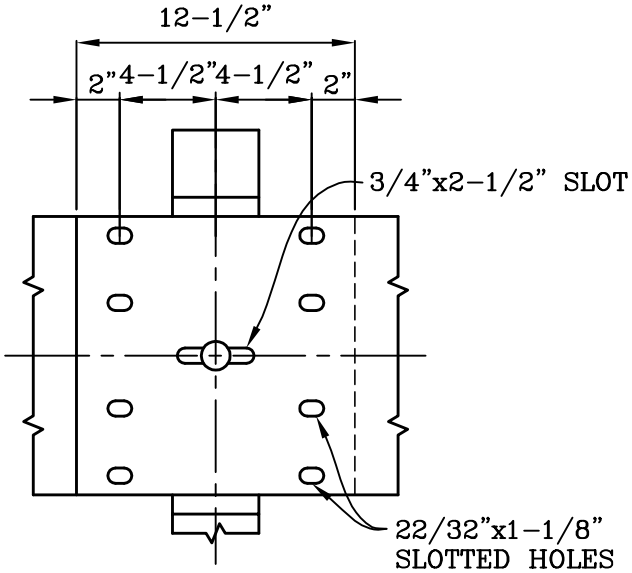

RAIL SPLICE

CITY OF MISSION VIEJO

METAL BEAM GUARD RAILING

STANDARD PLAN NO.

502

9-23-03

APPROVED RCE 30190 DATE

SHT 2 OF 2

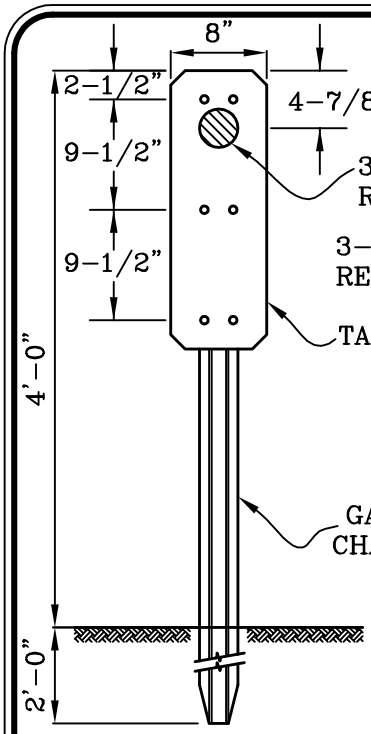

GUIDE MARKER
TYPE F (1)

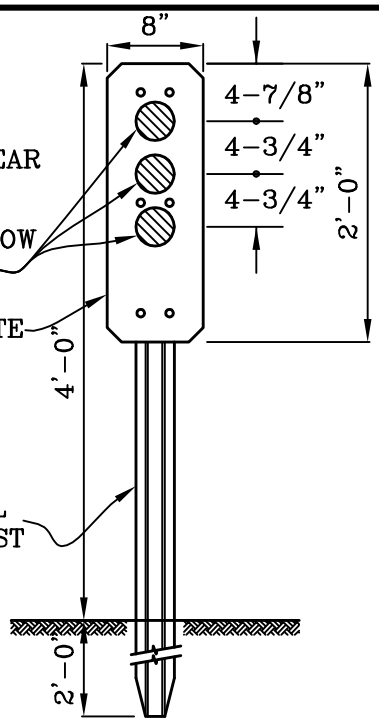

CLEARANCE MARKER
TYPE L(2) AND L(3)

BOTTOM REFLECTOR
DELETED ON TYPE L(2)

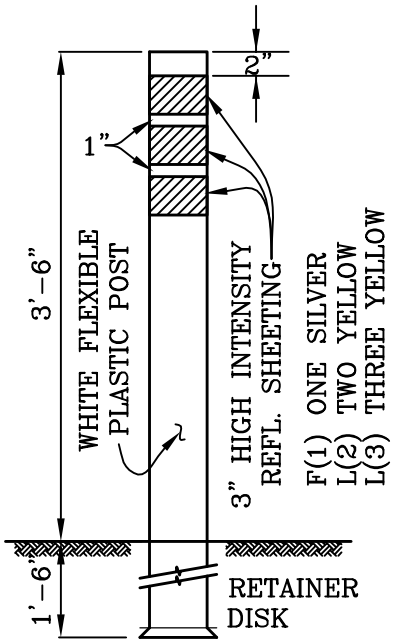

ALTERNATE* PLASTIC MARKER

"AUTOPOST" OR EQUAL AS
APPROVED BY ENGINEER

*ALTERNATE PLASTIC MARKERS SHALL BE USED WHERE SPECIFIED OR WHERE PROBABILITY OF VEHICLE IMPACT IS HIGH.

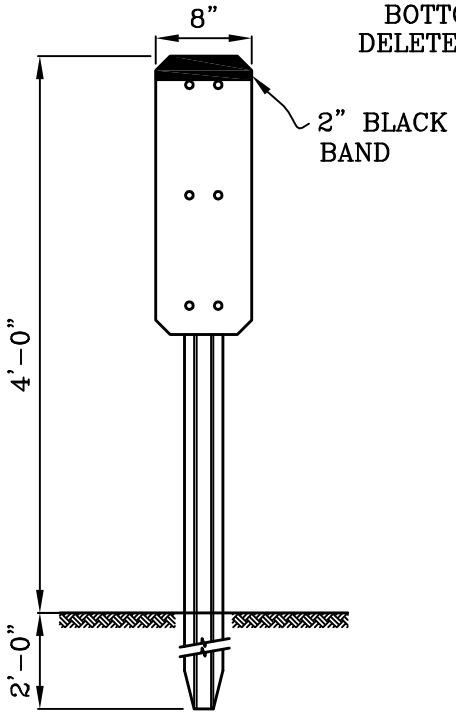

CULVERT MARKER

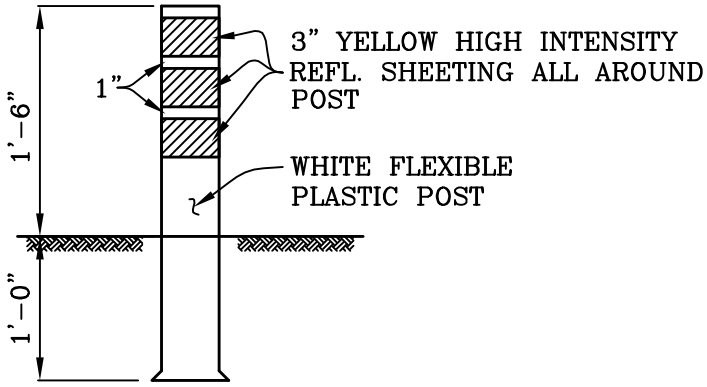

ISLAND NOSE MARKER

"AUTOPOST" OR EQUAL AS
APPROVED BY ENGINEER

SEE SHEETS 2 AND 3 FOR PLACEMENT AND NOTES

CITY OF MISSION VIEJO

MISSION VIEJO CALIFORNIA 1988

MARKERS

STANDARD PLAN NO.

503

Kevin Henderson 9-23-03

APPROVED RCE 30190 DATE

SHT 1 OF 3

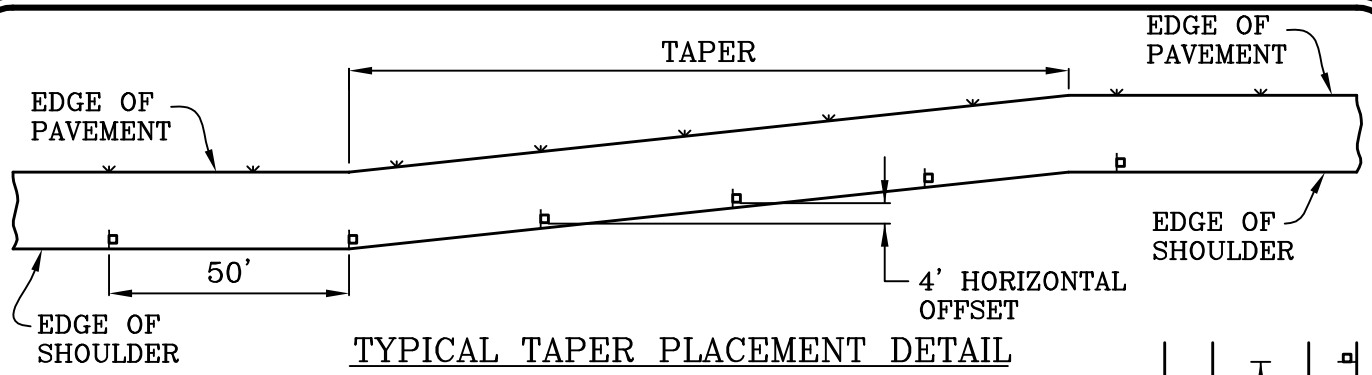

TYPICAL TAPER PLACEMENT DETAIL

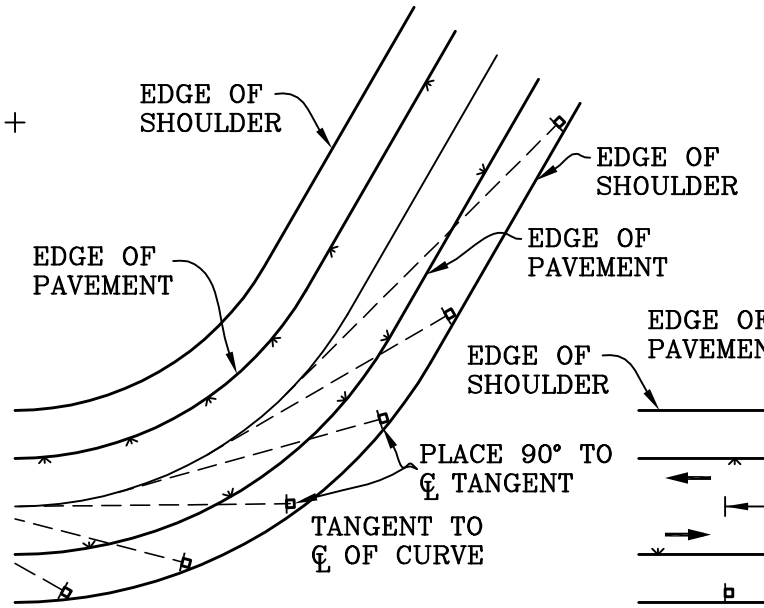

CURVE PLACEMENT DETAIL

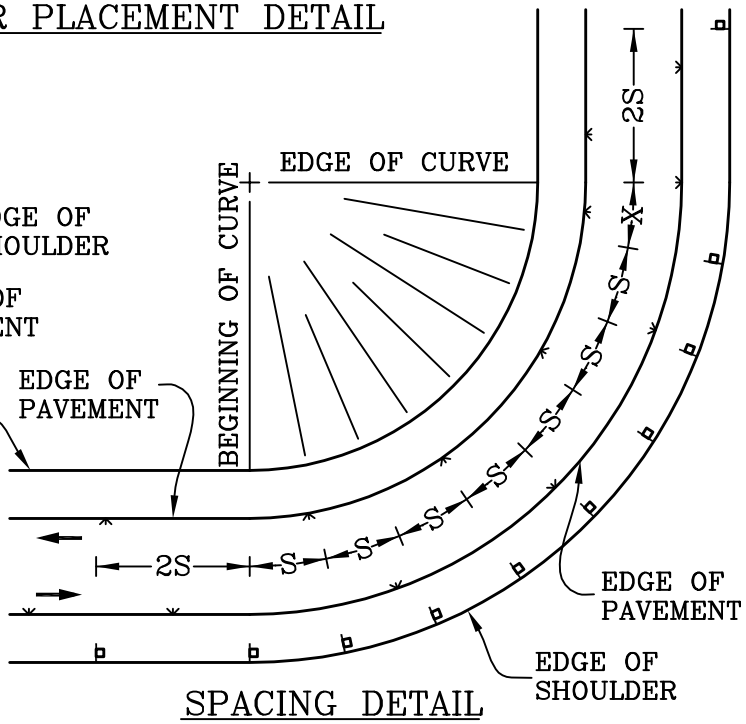

SPACING DETAIL

TABLE 1			
R(FT.)	S(FT.)	R(FT.)	S(FT.)
50	20	700	75
75	20	800	80
100	25	900	85
150	30	1000	90
200	35	1200	100
300	50	1400	110
400	55	1600	115
500	65	1800	125
600	70	2000	130

NOTES:
1. MAX. SPACING BETWEEN GUIDE MARKERS = 300'. MIN. SPACING = 20'.
2. GUIDE MARKER SPACING ON CURVES LESS THAN 2000' RADIUS SHALL CONFORM TO THAT SPACING INDICATED IN TABLE 1.
3. PRORATE DISTANCE X AMONG ALL SPACINGS WITHIN CURVE SO LAST GUIDE MARKER FALLS AT END OF CURVE.

LEGEND:
S = GUIDE MARKER SPACING IN FEET.
$S = 3\sqrt{R-50}$
R = CENTERLINE CURVE RADIUS IN FEET.
⊢ = GUIDE MARKER
X = DISTANCE REMAINING WITHIN CURVE FROM LAST CALCULATED GUIDE MARKER TO END OF CURVE.

CITY OF MISSION VIEJO

MISSION VIEJO CALIFORNIA 1988

MARKERS

STANDARD PLAN NO. 503

Robert Henderson 9-23-03

APPROVED RCE 30190 DATE

SHT 2 OF 3

NOTES:

USE OF GUIDE MARKERS AND CLEARANCE MARKERS ON CITY ROADS SHALL CONFORM TO THE FOLLOWING.

1. GUIDE MARKER F(1)
   a. ON ROADWAY CURVES OF LESS THAN 2000 FT. RADIUS, PLACE AS PER CHART ON SHEET 2.
   b. ON SHOULDERS ON TANGENTS WHERE THE FILL HEIGHT EXCEEDS 6 FT., PLACE AT 300 FT. INTERVALS.
   c. ON PAVEMENT OR ROADWAY TAPERS, PLACE FOR 4 FT. HORIZONTAL OFFSET.

2. CLEARANCE MARKERS L(2)
   a. USED ON SHARP OR SUBSTANDARD CURVES.
   b. ON THE APPROACH SIDE OF RURAL INTERSECTIONS.
   c. ON DETOURS.
   d. FOR OTHER SPECIAL DELINEATION.

3. CLEARANCE MARKER L(3)
   a. ALONG PEDESTRIAN PATHS OR BIKE WAYS FOR SEPARATION FROM VEHICULAR TRAFFIC.
   b. FOR OBSTRUCTION LESS THAN 8 FT. FROM THE EDGE OF PAVEMENT, INCLUDING BRIDGE ABUTMENTS.
   c. FOR WIDENED SECTIONS, PER STD. PLAN 501.

4. ISLAND NOSE MARKER
   a. IN THE FAR NOSE OF MEDIAN ISLANDS AT OPENINGS AND INTERSECTIONS.
   b. FACING APPROACHING TRAFFIC AT THE POINTS OF ISLANDS FORMING RIGHT TURN LANES.
   c. WHERE TRAFFIC DIVIDES AND MAY PROPERLY GO TO EITHER SIDE OF ISLAND.

5. CULVERT MARKER
   a. LOCATE AT EDGE OF SHOULDER OPPOSITE THE END OF CULVERT.

CITY OF MISSION VIEJO

MISSION VIEJO CALIFORNIA 1988

MARKERS

STANDARD PLAN NO.

503

Kevin Henderson 9-23-03

APPROVED RCE 30190 DATE

SHT 3 OF 3

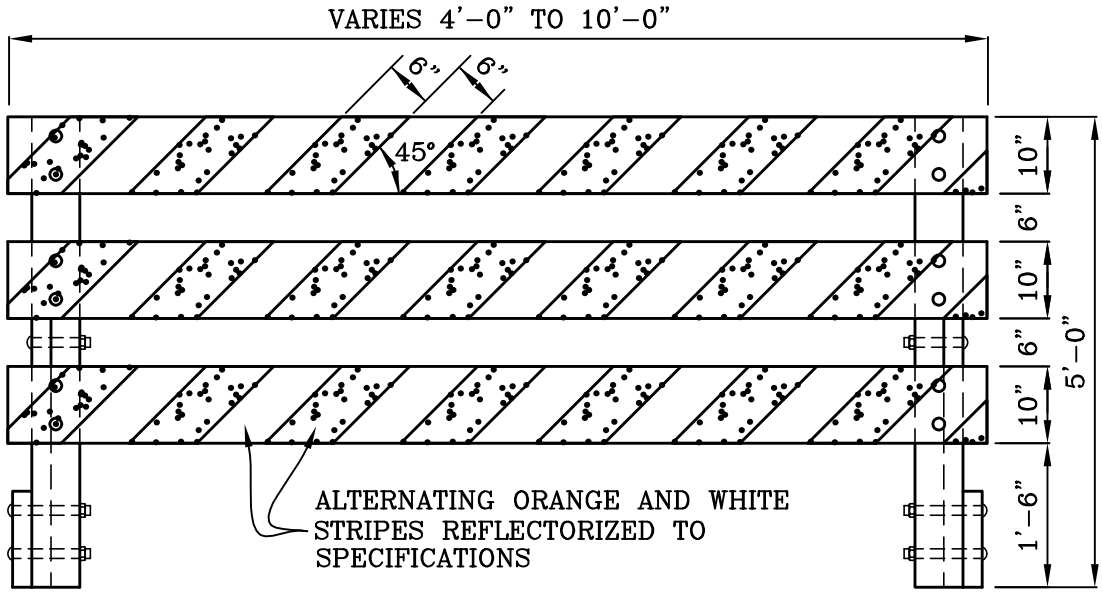

FRONT VIEW

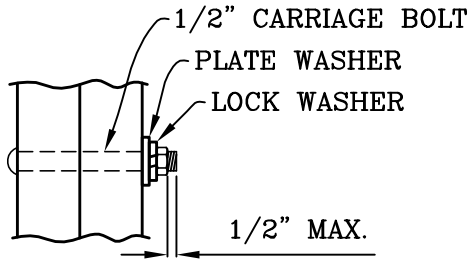

BOLT CONNECTION DETAIL

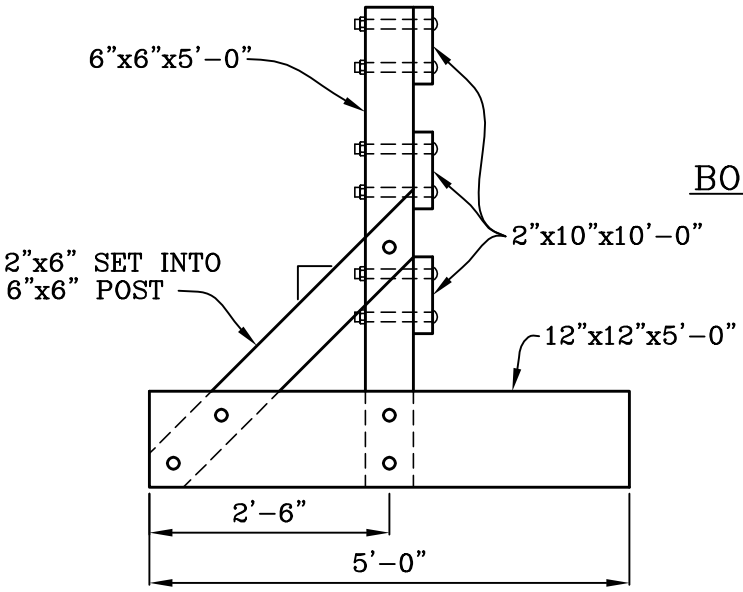

END VIEW

CITY OF MISSION VIEJO

	TIMBER BARRICADE (TYPE III)	STANDARD PLAN NO. 504
	APPROVED — RCE 30190 — DATE 9-23-03	SHT 1 OF 2

TYPE III BARRICADES SHALL BE USED AS DIRECTED BY THE CITY ENGINEER FOR SPECIAL TRAFFIC CONTROL APPLICATIONS. BARRICADES SHALL BE SECURED WITH CHAINS AS DIRECTED BY THE CITY ENGINEER.

LUMBER:

ALL LUMBER SHALL BE KILN DRIED DOUGLAS FIR, CONSTRUCTION GRADE OR BETTER. S4S.

CONNECTIONS:

ALL CONNECTIONS SHALL BE BOLTED AS SHOWN ON PLAN AND BOLT CONNECTION DETAIL. ALL BOLTS, WASHERS AND NUTS SHALL BE HOT DIPPED GALVANIZED.

PAINTING:

ALL WOOD SURFACES SHALL BE PAINTED WITH ONE COAT OF WOOD PRIMER. WOOD PRIMER SHALL COMPLY IN ALL RESPECTS WITH FEDERAL SPECIFICATIONS TT-P-0025D, EXCEPT THAT IT SHALL DRY HARD IN NOT MORE THAN 12 HOURS. SUBSEQUENT TO APPLICATION OF WOOD PRIMER, ALL WOOD SURFACES, EXCEPT RAIL SURFACES TO BE REFLECTORIZED, WILL BE PAINTED WITH ONE COAT OF LATEX-BASE WHITE PAINT. PAINT SHALL COMPLY IN ALL RESPECTS WITH FEDERAL SPECIFICATION TT-P-0096B.

REFLECTORIZED RAILS:

THE ENTIRE FRONT FACE OF ALL 2"x10"x10'-0" (3 EA.) RAILS SHALL BE COVERED WITH A REFLECTORIZED SHEETING MATERIAL HAVING ALTERNATING 6" WIDE ORANGE AND WHITE STRIPES SLOPING DOWNWARD TO THE LEFT AT 45°. REFLECTIVE SHEETING SHALL BE APPLIED TO THE WOOD RAIL SURFACE IN ACCORDANCE WITH MANUFACTURER'S RECOMMENDATIONS, AND SHALL NOT CHIP, PEEL, OR CRACK, AND SHALL MAINTAIN THE SPECIFIED MINIMUM REFLECTANCE VALUES WHEN EXPOSED TO EXTERNAL USE FOR A PERIOD OF 3 YEARS. REFLECTIVE SHEETING SHALL MEET THE FOLLOWING MINIMUM DRY REFLECTANCE VALUES AT 0.2 AND 0.5 DEGREE DIVERGENCE EXPRESSED IN UNITS OF CANDLEPOWER PER FOOT CANDLE PER SQUARE FOOT, AS MEASURED AT A DISTANCE OF 50 FEET FROM THE LIGHT SOURCE. THE WET REFLECTANCE VALUES SHALL BE A MINIMUM OF 90 PERCENT OF THE DRY VALUES.

DRY REFLECTIVE VALUES

DIVERGENCE ANGLE (DEGREE)	INCIDENCE ANGLE (DEGREE)	WHITE	ORANGE
0.2	-4	50.0	13.0
0.2	30	12.0	4.0
0.5	-4	15.0	6.5
0.5	30	6.0	2.5

CERTIFICATES OF COMPLIANCE:

SUPPLIER SHALL FURNISH CERTIFICATES OF COMPLIANCE SPECIFICATIONS FOR LUMBER, PAINT, AND REFLECTIVE SHEETING AS REQUIRED BY THE CITY ENGINEER.

CITY OF MISSION VIEJO

MISSION VIEJO CALIFORNIA 1988

TIMBER BARRICADE (TYPE III)

STANDARD PLAN NO.

504

Robert Henderson 9-23-03

APPROVED RCE 30190 DATE

SHT 2 OF 2

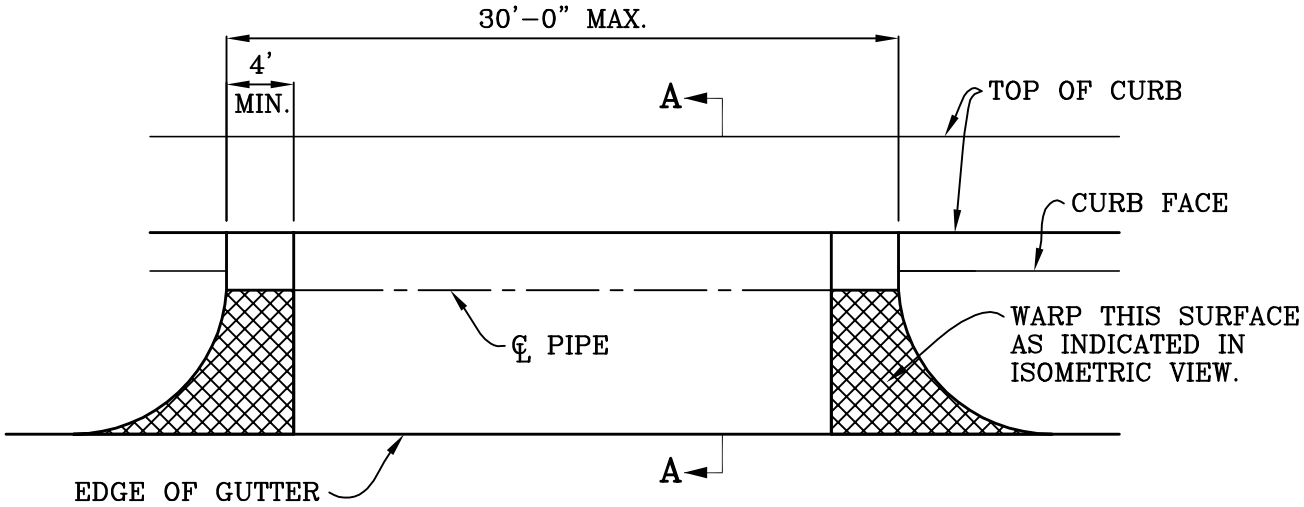

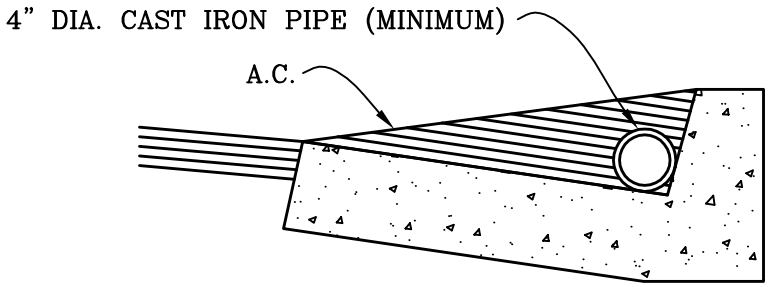

SECTION A–A

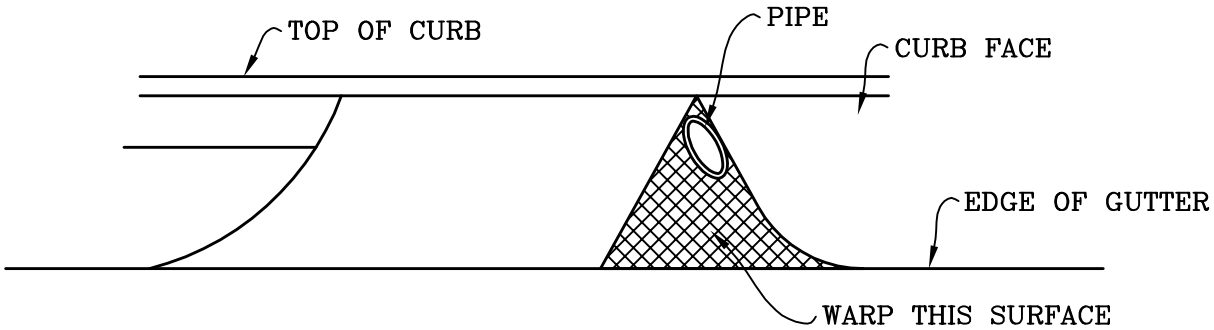

ISOMETRIC VIEW

PAINT AND MAINTAIN SURFACE WITH WHITE REFLECTIVE PAINT (CODIT OR EQUAL)

CITY OF MISSION VIEJO

TEMPORARY CONSTRUCTION ACCESS RAMP

STANDARD PLAN NO.

505

Robert Henderson 9-23-03

APPROVED RCE 30190 DATE

SHT 1 OF 1

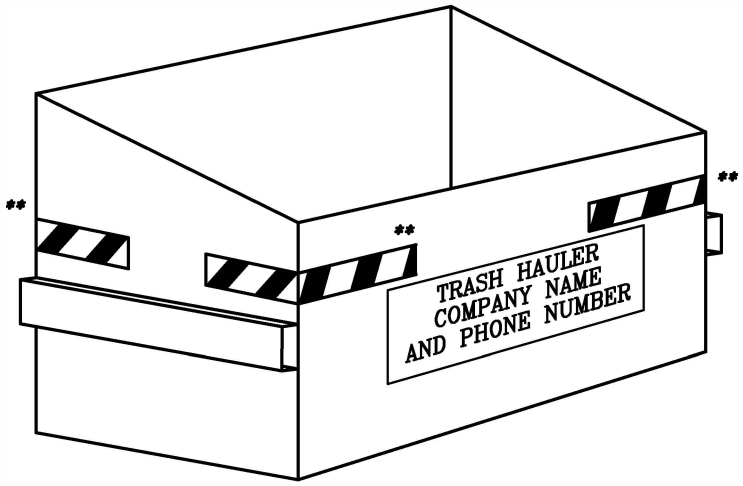

CASE 1

** REFLECTIVE SHEETING MATERIAL PER NOTES ON SHEET 2

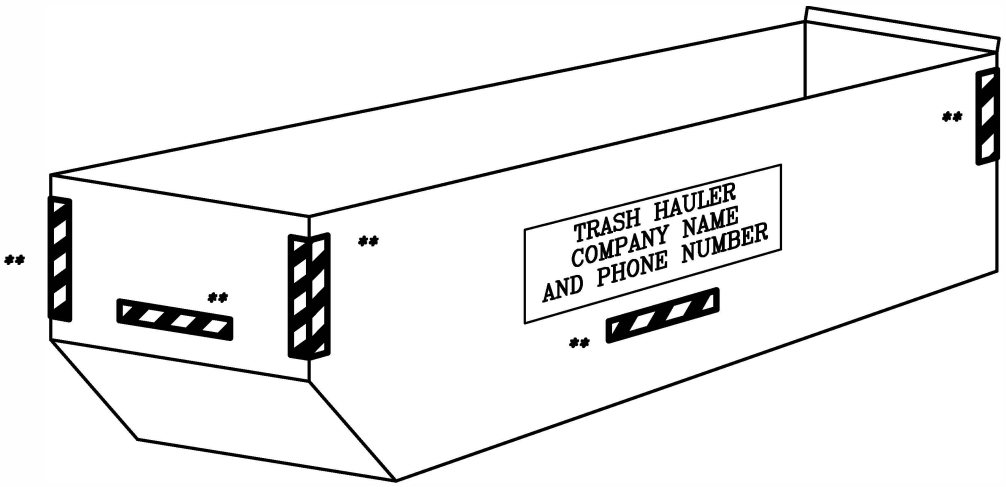

CASE 2

CITY OF MISSION VIEJO

RUBBISH/CONSTRUCTION BIN REFLECTORIZATION

STANDARD PLAN NO.

506

Roger Henderson 9-23-03

APPROVED RCE 30190 DATE

SHT 1 OF 2

NOTES:

CASE 1 – BINS WITH A CAPACITY OF 6 CY AND LESS

SHEETING MATERIAL (IN CONFORMANCE WITH THE SPECIFICATION BELOW) PLACED AT EACH CORNER EXTENDING EACH DIRECTION A DISTANCE OF NOT LESS THAN 12 INCHES.

STRIPS TO BE LOCATED BETWEEN SIDE CHANNELS AND THE TOP OF BIN.

CASE 2– BIN LARGER THAN 6 CY CAPACITY

SHEETING MATERIAL (IN CONFORMANCE WITH THE SPECIFICATION BELOW) PLACED AS FOLLOWS:

VERTICAL MAKINGS AT EACH CORNER IN TWO 4 INCH STRIPS–ONE EACH SIDE OF CORNER. LOCATED MID–HEIGHT AT A MINIMUM LENGTH OF 24 INCHES.

HORIZONTAL MARKINGS CENTERED ON EACH SIDE, MINIMUM LENGTH OF 24 INCHES.

REFLECTORIZED SHEETING MATERIAL SPECIFICATION

REFLECTORIZED SHEETING MATERIAL SHALL BE "SAFETYLITE" CODE NO. 73–62 SERIES OF APPROVED EQUAL "ENGINEER GRADE" WITH A REFLECTANCE 200 TIMES BRIGHTER THAN A WHITE PAINTED SURFACE WHEN A LIGHT SHINED ON IT AND SHALL MAINTAIN THAT LEVEL OF REFLECTANCE FOR A MINIMUM PERIOD OF 3 YEARS. MARKINGS SHALL BE 4 INCHES WIDE HAVING ALTERNATING STRIPES SLOPING DOWNWARD TO THE LEFT AT 45 DEGREES. STRIPING COLORS SHALL BE YELLOW AND BLACK OR OTHER COMBINATION APPROVED BY THE CITY ENGINEER. REFLECTIVE SHEETING SHALL BE APPLIED TO BIN SURFACE IN ACCORDANCE WITH MANUFACTURER'S RECOMMENDATIONS.

CITY OF MISSION VIEJO

RUBBISH/CONSTRUCTION BIN REFLECTORIZATION

STANDARD PLAN NO.

506

Kevin Henderson 9-23-03

APPROVED RCE 30190 DATE

SHT 2 OF 2

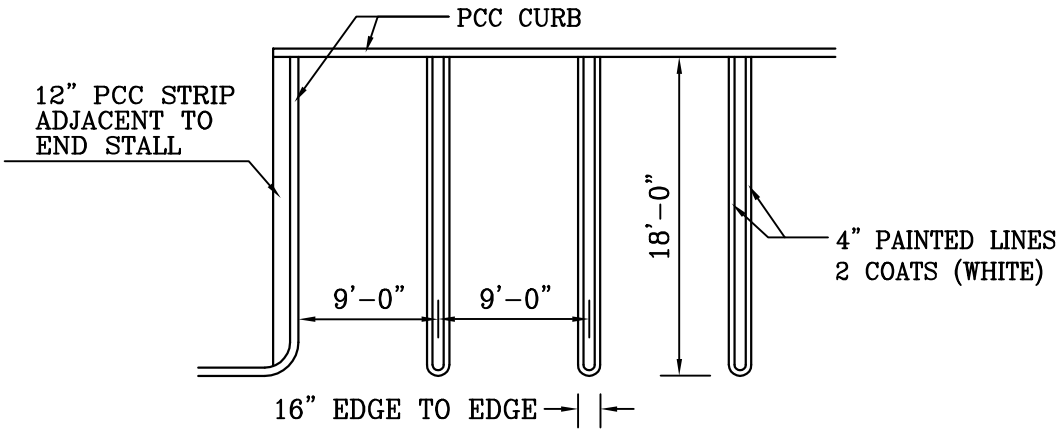

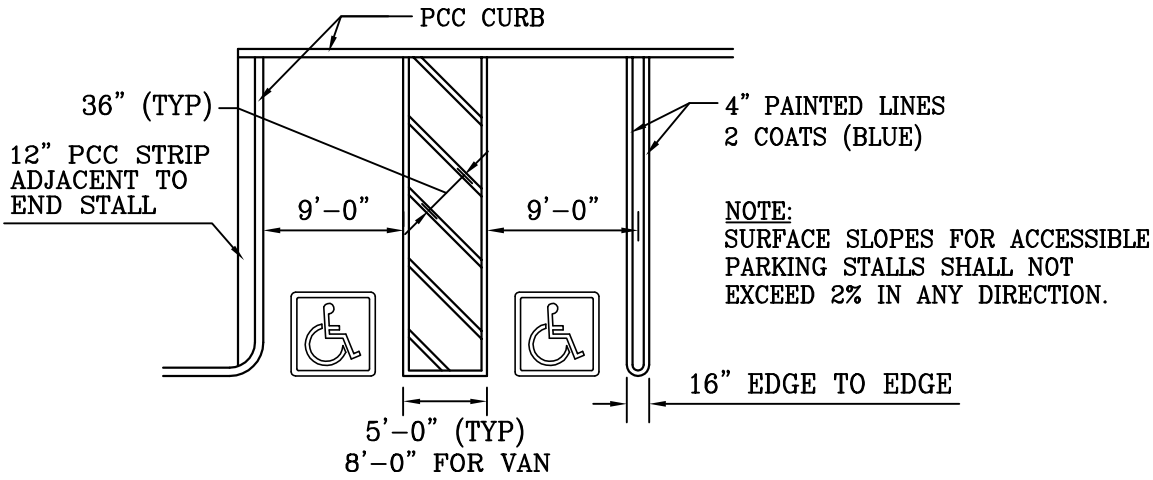

NOTE:
SURFACE SLOPES FOR ACCESSIBLE PARKING STALLS SHALL NOT EXCEED 2% IN ANY DIRECTION.

NOTES:
1. ALL STRIPING TO BE 4" WIDE
2. SYMBOL SHALL HAVE BLUE BACKGROUND WITH WHITE FIGFURE
3. PROVIDE TWO COATS OF PAINT
4. SYMBOL SHALL BE CENTERED IN OPENING OF STALL
5. ONE SYMBOL PER HANDICAP PARKING STALL

CITY OF MISSION VIEJO

PARKING STALL STRIPING

STANDARD PLAN NO.
507

APPROVED RCE 30190 DATE 9-23-03

SHT 1 OF 1

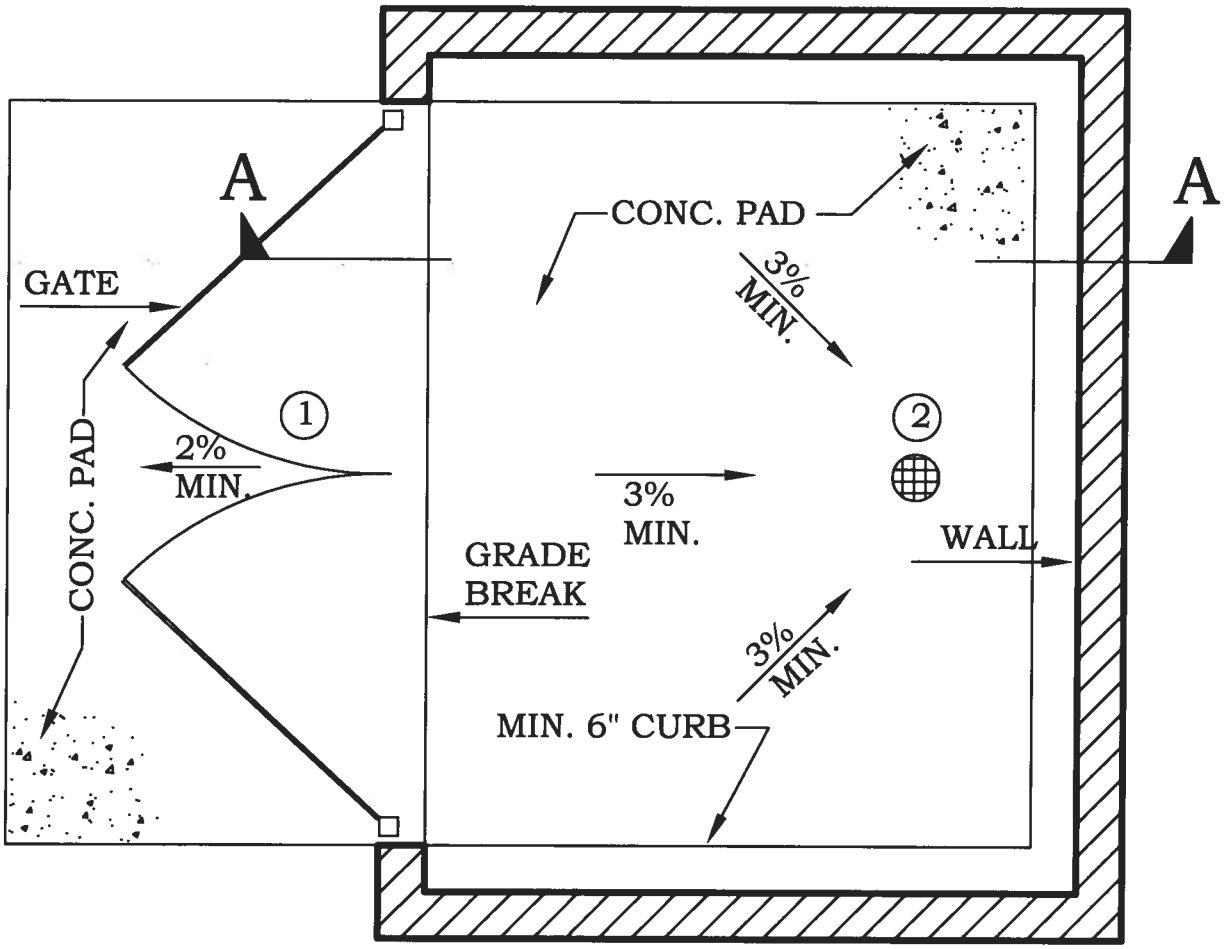

NOTES:

1. CONSTRUCT GATE AT GRADE BREAK.
2. CONNECT DRAIN TO SANITARY SEWER WITH APPROVAL OF WATER DISTRICT.

CITY OF MISSION VIEJO

	TRASH ENCLOSURE PLAN VIEW	STANDARD PLAN NO. 508
	Rich Schlesinger 08/01/05 APPROVED BY: CITY ENGINEER RCE 51160 DATE	SHT 1 OF 3

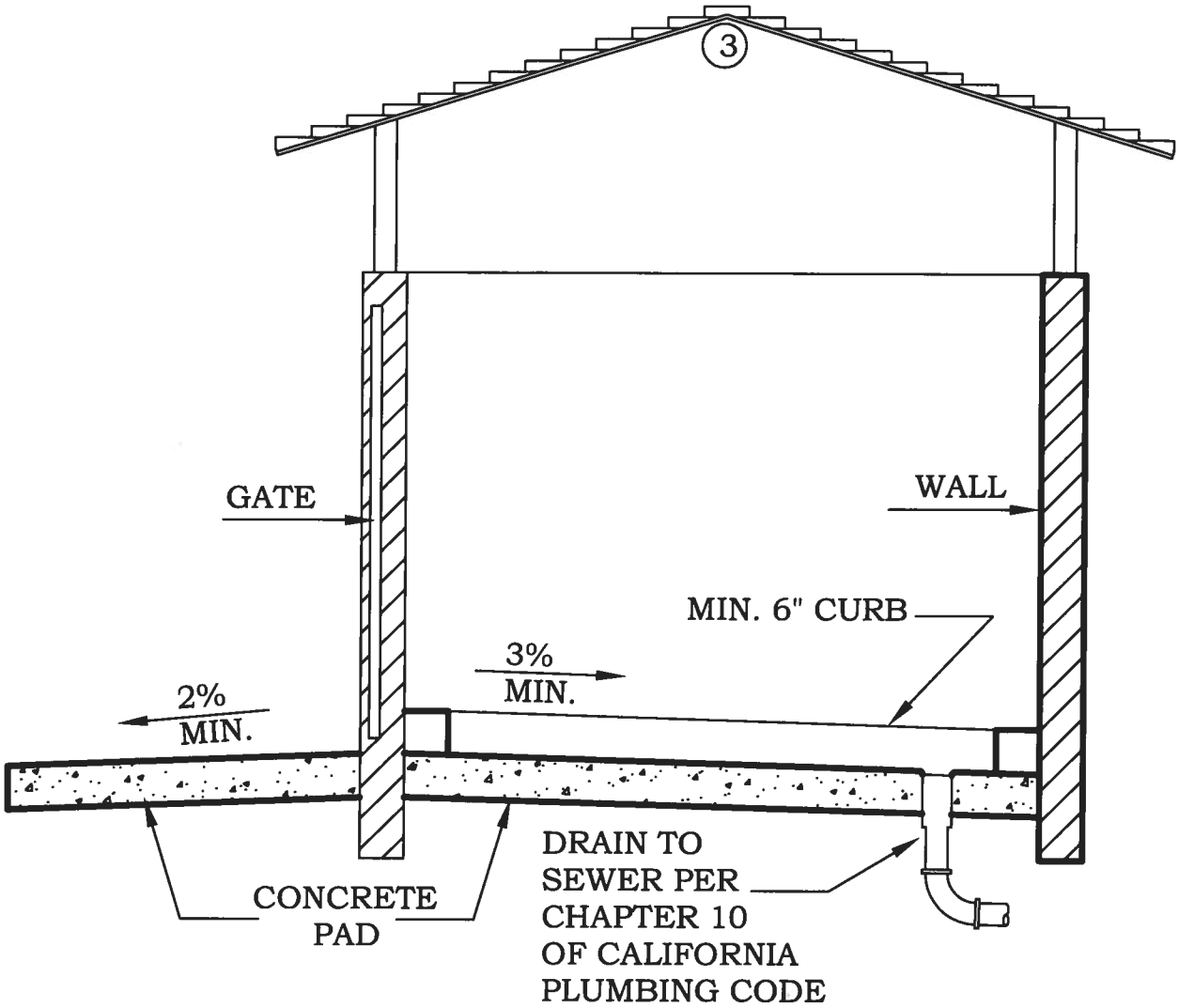

NOTE:

(3) ROOF DESIGN PER CITY BUILDING DEPARTMENT.

NOTE:

TRASH ENCLOSURE STRUCTURE PER SEPARATE CITY BUILDING DEPARTMENT PERMIT.

CITY OF MISSION VIEJO

SECTION A-A

STANDARD PLAN NO.

508

Rich Schlesinger 08/01/05

APPROVED BY: CITY ENGINEER RCE 51160 DATE

SHT 2 OF 3

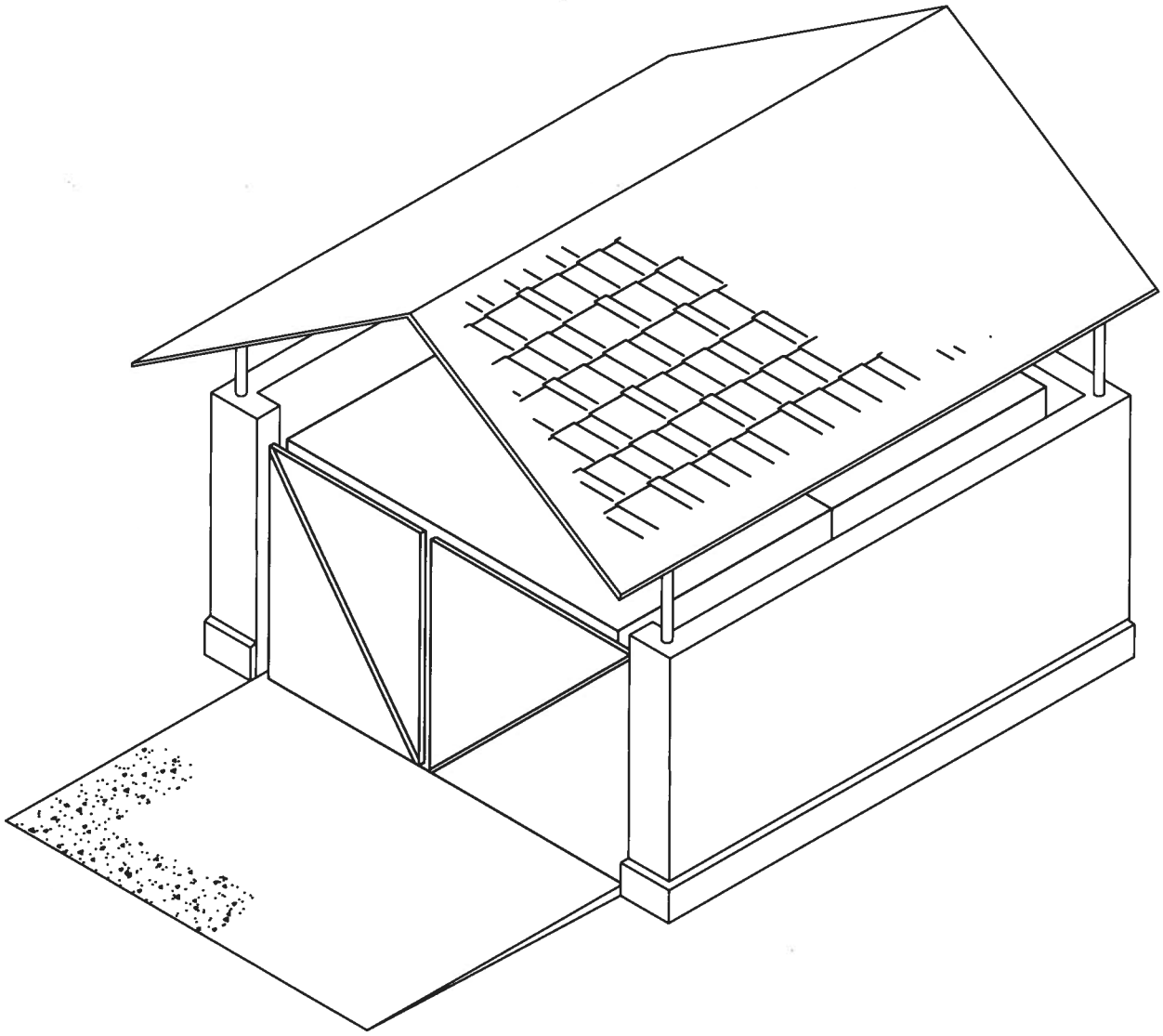

CITY OF MISSION VIEJO

TRASH ENCLOSURE
OVERALL VIEW

STANDARD
PLAN NO.

508

Rich Schlesinger 08/01/05

APPROVED BY: CITY ENGINEER RCE 51160 DATE

SHT 3 OF 3

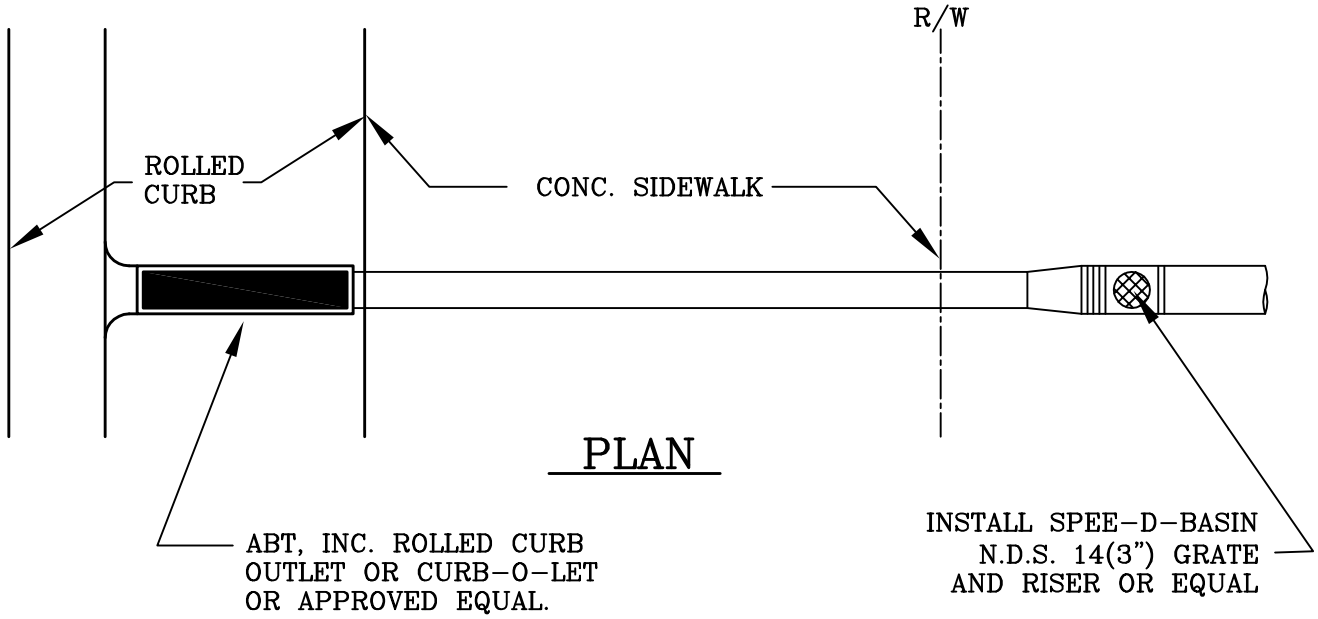

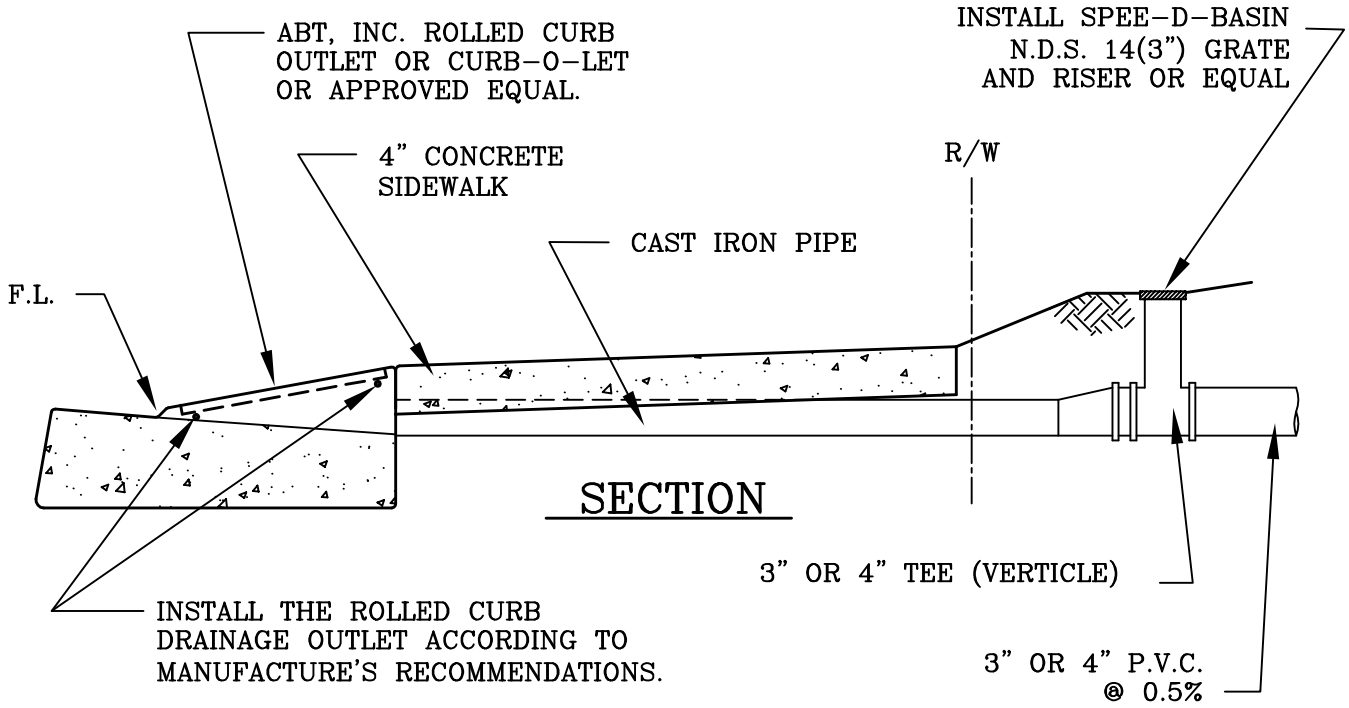

CITY OF MISSION VIEJO

ROLLED CURB DRAIN OUTLET DETAIL

509

Rich Schlesinger 08/01/05

APPROVED BY: CITY ENGINEER RCE 51160 DATE

SHT 1 OF 1

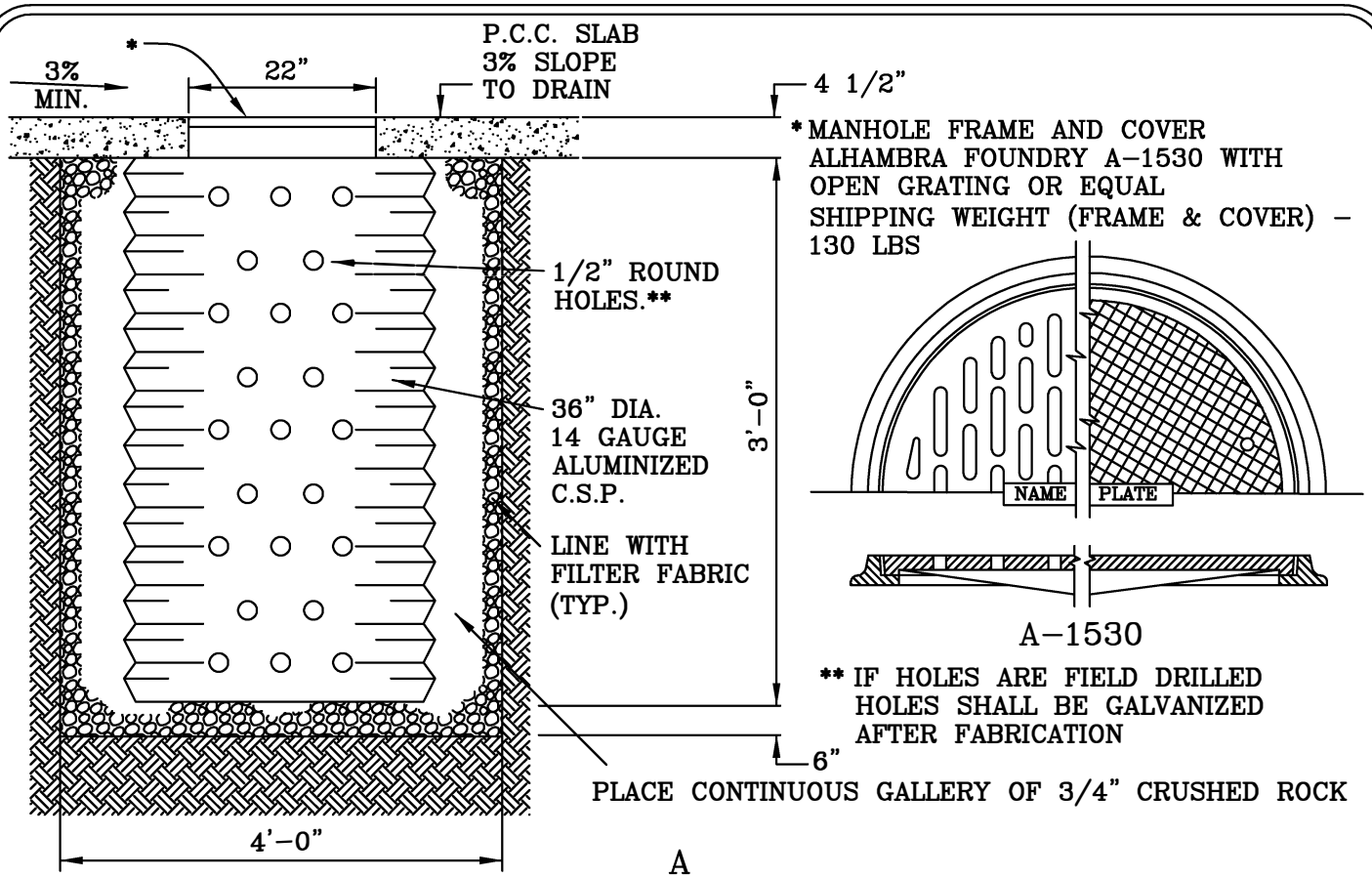

SECTION A-A

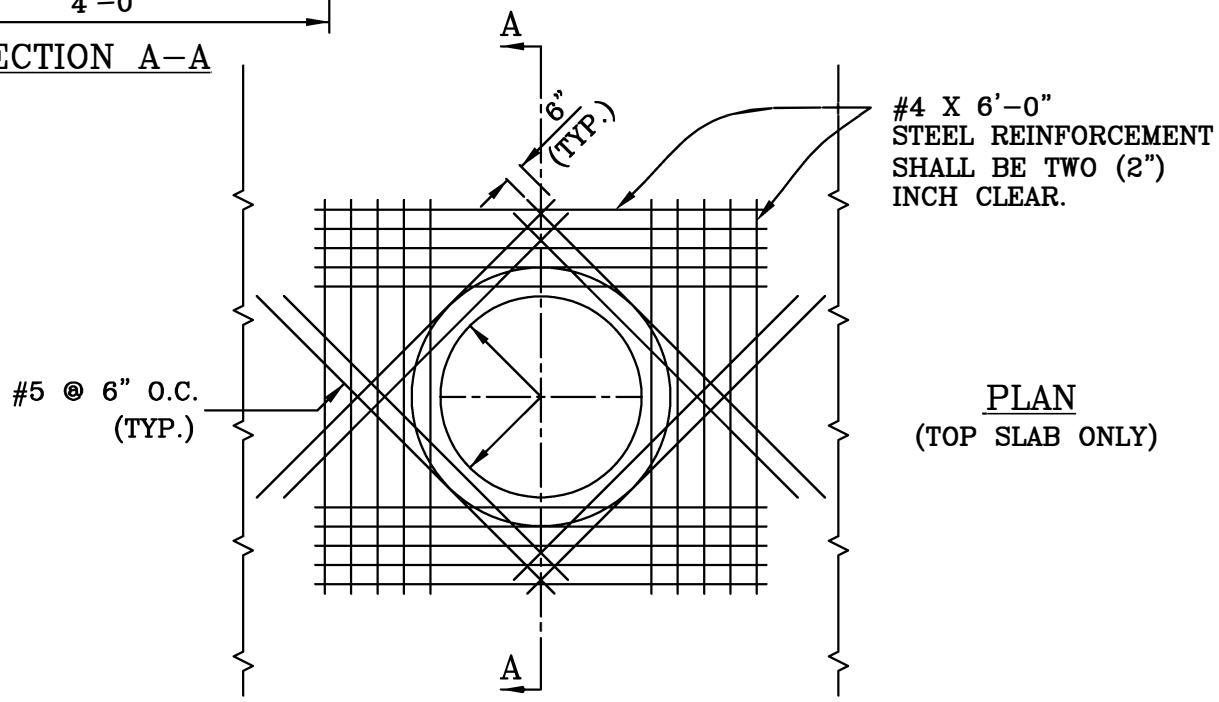

PLAN
(TOP SLAB ONLY)

CITY OF MISSION VIEJO

TRASH BIN ENCLOSURE
SUMP DRAIN ALTERNATIVE

STANDARD DETAIL NO.

510

APPROVED BY: CITY ENGINEER RCE 51160 DATE 08/17/12

SHT 1 OF 1